Corporate
mission
企业使命

Innovation

在产品上了解客户需求，做到细致入微，专注产品创新，准确匹配客户需求产品，做到人无我有，人有我精；

We understand customer needs and meticulously implement product development. We focus on product innovation to precisely match customer needs. We strive to offer products that others don't , and to be superior to others.

创新

Quality

在生产中严格把控品质，做到出厂零缺陷，给客户提供高品质产品；

We strictly control quality during production to ensure zero defects before shipment, providing customers with high-quality products.

品质

Service

在售后上及时响应，及时处理，认真负责，让客户无后顾之忧。

We provide prompt response and timely processing in after-sales service, ensuring a worry-free experience for our customers.

服务

Main Products
主要经营产品

Office glass partition material
办公室玻璃隔墙材料

① 全铝结构(26款、40款、60款、80款、84款、100款、108款、120款)
Full-Aluminum Structure (26mm, 40mm, 60mm, 80mm, 84mm, 100mm, 108mm, 120mm)

② 钢铝结构(84款、92款、100款、108款)
Steel-Aluminum Structure (84mm, 92mm, 100mm, 108mm)

③ 全钢防火结构(40款、105款、108款、113款、 123款)
Full-steel Fire-rated Structure(40mm, 105mm, 108mm, 113mm, 123mm)

Aluminum and wood ecological door,Suit door
铝木生态门、套装门

Aluminum alloy skirting
铝合金踢脚线

Office
Partition

办公隔断篇

What?

What are office partitions?
How do partition styles differ?

什么是办公隔断?
隔断以什么区分款式?

公共办公区域办公室与办公室之间空间划分用的墙体，大多采用玻璃饰面，也可使用木板、钢板或其它厚度不低于4mm的装饰面板材料；可做单层也可做双层。

大多以墙体厚度以及结构来区分款式，以明显的外观及功能性来命名样式，如：80全铝款菱形单玻隔断、84款内钢外铝双玻百叶隔断、108款全钢双层6mm防火玻璃隔断。

Walls used to divide spaces between offices in public office areas are typically glass-faced. Wood, steel, or other decorative panels with a thickness of at least 4mm can also be used. They can be single-layer or double-layer.

Styles are typically distinguished by wall thickness and structure, with styles often named based on their distinct appearance and functionality. For example: Model 80 all-aluminum diamond -shaped single-glazed partition, Model 84 interior steel and exterior aluminum double-glazed louvered partition, and Model 108 full steel double-glazed 6mm fire-rated glass partition.

What styles have we made?

我们做了哪些结构和款式?

① 全铝结构（直角）
Full-Aluminum Structure

26款(26mm)、40款(40mm)、
60款(60mm)、80款(80mm)、
84款(84mm)、100款(100mm)、
108款(108mm)、120款(120mm)

② 钢铝结构（内钢外铝45°）
Steel-Aluminum Structure

84款(84mm)、92款(92mm)、
100款(100mm)、108款(108mm)

③ 全钢防火结构
Full-Steel Fire-Rated Structure

40款(40mm)、105款(105mm)、
108款(108mm)、113款(113mm)、
123款(123mm)

Full-Aluminum Construction (Right-Angle) 全铝结构（直角）

通体结构为铝合金材质，以直角拼接为主，外观简洁、市场库存颜色多样；加工设备需求低，加工精度要求低，容错率高可现场修改，安装简单快捷，材料成本低、加工成本低、安装成本低。

The entire structure is constructed of aluminum alloy, primarily with right-angle joints. It features a simple appearance and is available in a variety of colors. It requires minimal processing equipment and precision, offers high tolerance for errors, and allows for on-site modifications. Installation is quick and easy, with low material, processing, and installation costs.

Steel-Aluminum Structure
(Steel Inside, Aluminum Outside,45°)
钢铝结构 (内钢外铝45°)

外部为铝合金材质，内部龙骨多为镀锌钢管或工字钢；外观常见于45°拼角，线条感、立体感。加工门槛偏高、安装门槛偏高、从业人员多为有多年隔断经验或长期注重中高端公共装修类配套的公司及个人；该结构外形美观、结构特殊。

The exterior is constructed of aluminum alloy, while the internal keel is typically galvanized steel pipe or I-beam. The exterior often features 45° angles, creating a linear, three-dimensional effect. The manufacturing and installation requirements are relatively high, and practitioners are typically companies or individuals with extensive experience in partitioning or who specialize in mid-to-high-end public decoration. This structure offers a beautiful appearance and unique structure.

Full-steel fire-rated
structure 全钢防火结构

通体为材质为钢制，可选镀锌钢覆膜、喷涂、电镀表面或各种标号(201、304)不锈钢，多为直角拼接，结构可定制，可同全铝卡扣安装方式相同，也可同钢铝拼框组装；主要特点特点提现在功能性上，客户需求一般集中在 “防火、抗撞击能力、稳固性”。

The structure is constructed entirely of steel, with options for galvanized steel coating, spray coating, electroplating, or various grades of Stainless steel (201, 304) , is typically joined at right angles, and the structure is customizable. It can be installed using the same snap-on method as all-aluminum or assembled with steel and aluminum frames. Key features are functionality, with customer requirements typically focusing on fire resistance, impact resistance, and stability.

隔断的应用场景

Application scenarios of partition

广泛应用于
以下公共办公区域：

Widely used in the following public office areas:

- 写字楼 Office buildings
- 医院 Hospitals
- 学校 Schools
- 事业单位 Institutions
- 酒店办公区 Hotel offices
- 商务中心 Business centers
- 会所 Clubs
- 自建厂房 Private factories
- 住宅 Residential

Bastom
佰斯通

勇于创新、设计严谨、坚守品质
Courageous in innovation, rigorous in design, and steadfast in quality

Office Partition > 全铝结构(直角)

Full-Aluminum Structure (Right Angle)

办公隔断篇

Bastom 佰斯通

Full-Aluminum Structure
(Right Angle) 全铝结构(直角)

26款(26mm)、40款(40mm)、
60款(60mm)、80款(80mm)
84款(84mm)、100款(100mm)、
108款(108mm)、120款(120mm)

Ideal space,

Show the simplicity and rationality of modern office

理想的空间，展现现代办公室的简约与理性

办公隔断系列 **Office** Partition

全铝结构(直角)>

Full-Aluminum Structure (Right Angle)

26款极窄单玻

26mm narrow single glass

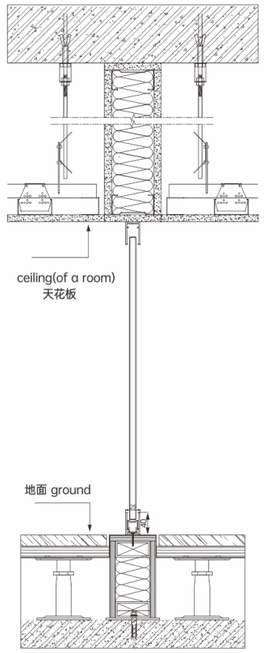

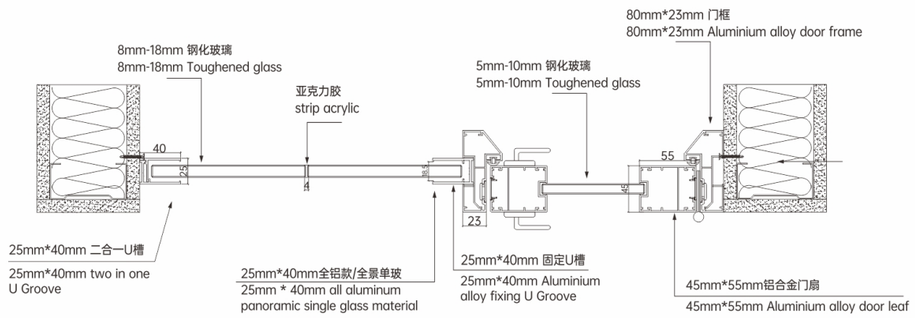

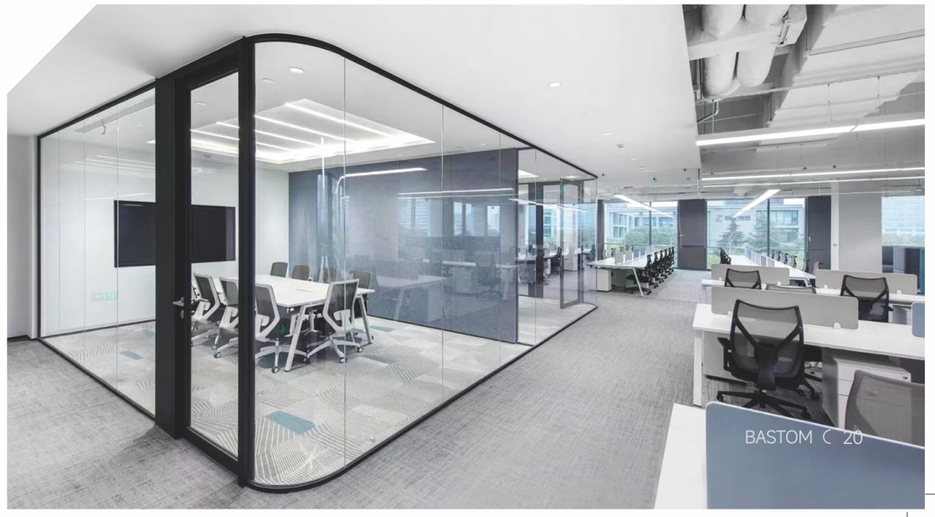

办公隔断系列 **Office** Partition

全铝结构(直角)>

Full-Aluminum Structure (Right Angle)

40款一体单玻

40mm Integrated single glass

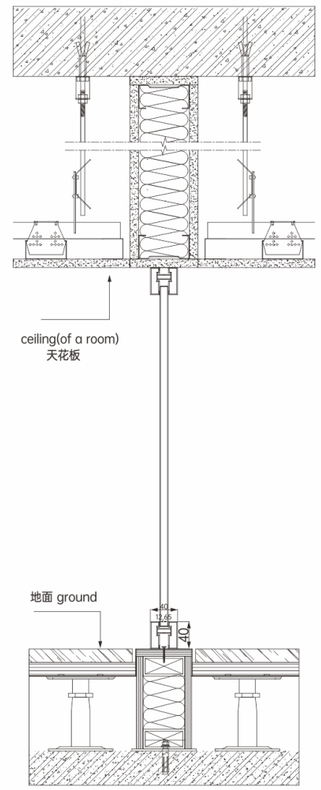

Green building materials,

long service life

绿色环保建材，使用寿命长

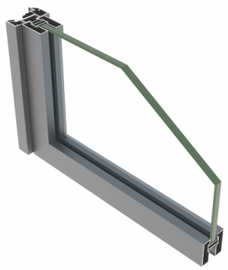

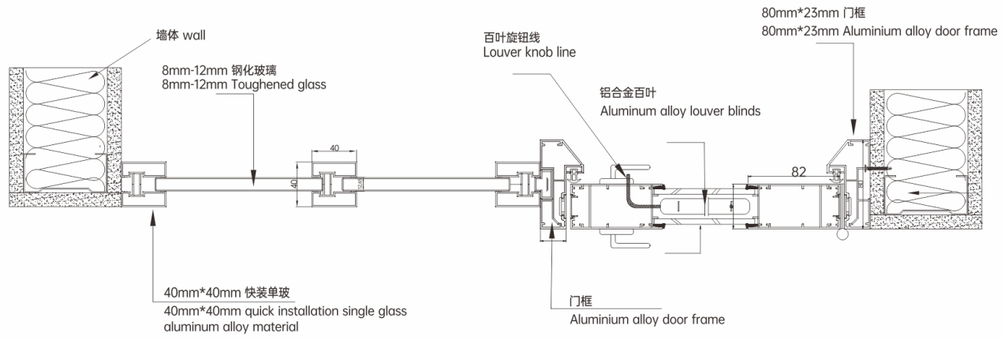

办公隔断系列 **Office** Partition

全铝结构(直角)>

Full-Aluminum Structure (Right Angle)

40款单面包墙

40mm one side for wall covering

Elegant and unique designs

often make a difference

高雅独特的设计往往会不同凡响

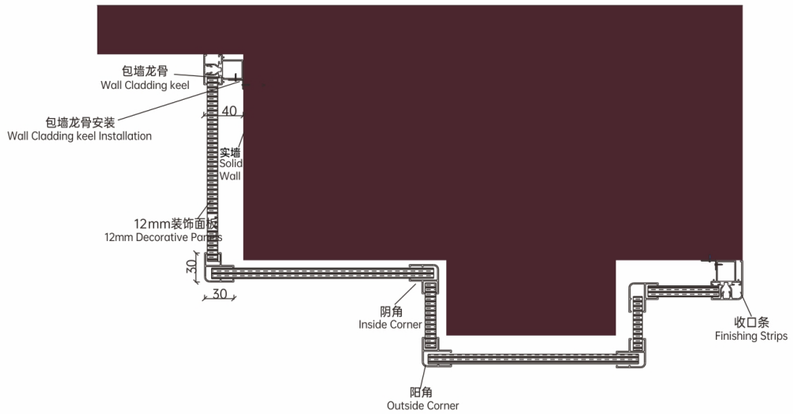

阴角包柱切面图
Inside Corner Column Cross-Section

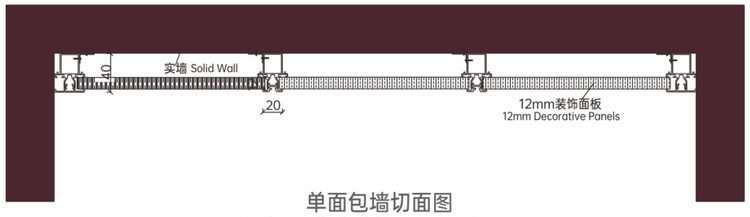

单面包墙切面图
Single Wall Cladding Cross-Section

Elegant and unique designs
often make a difference
高雅独特的设计往往会不同凡响

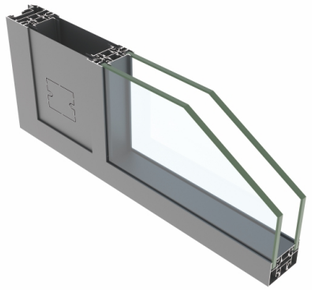

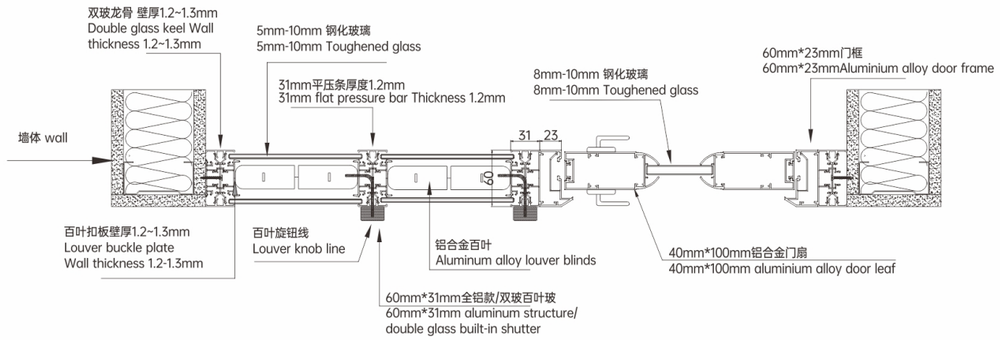

办公隔断系列 **Office** Partition
全铝结构(直角) >
Full-Aluminum Structure (Right Angle)

60款百叶双玻
60mm double glass with louver blinds

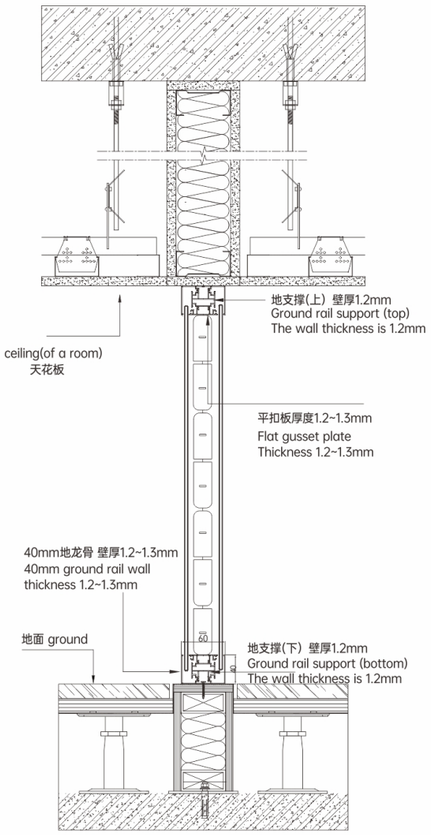

办公隔断系列 **Office** Partition

全铝结构(直角)>

Full-Aluminum Structure (Right Angle)

60款四合一单玻

60mm four in one single glass

Modern, classic
streamlined design style

现代、经典的流线设计风格

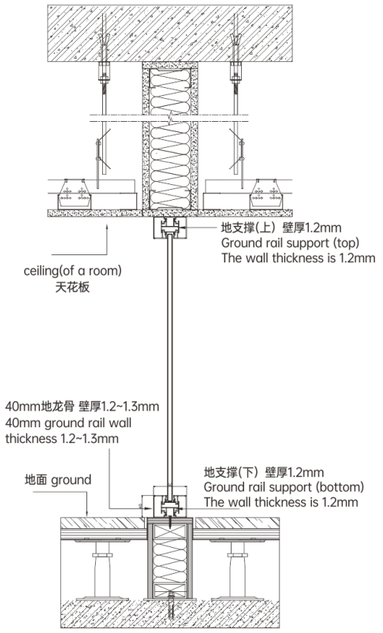

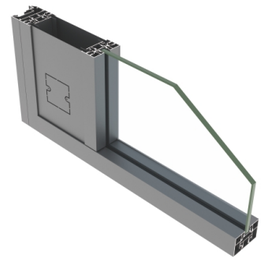

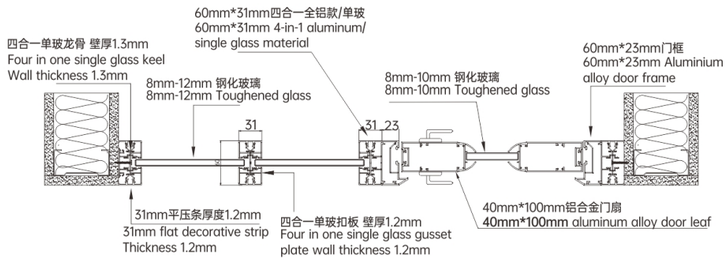

办公隔断系列 **Office** Partition

全铝结构(直角)>

Full-Aluminum Structure (Right Angle)

60款一体单玻

60mm Integrated single glass

Simple lines,

beautiful space　简约线条，优美空间

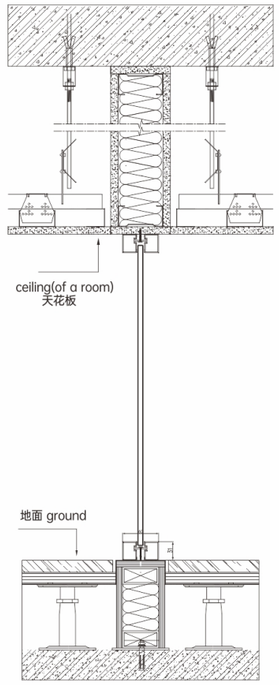

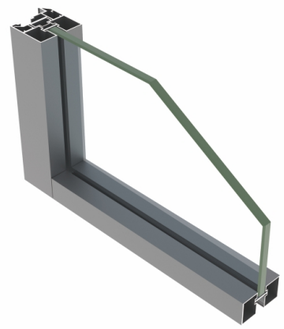

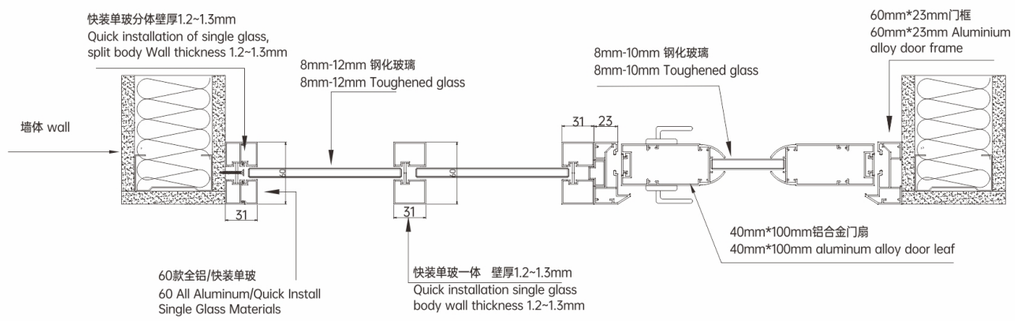

办公隔断系列 **Office** Partition

全铝结构（直角）>

Full-Aluminum Structure (Right Angle)

80款百叶双玻

80mm double glass with louver blinds

Green building materials,

long service life

绿色环保建材，使用寿命长

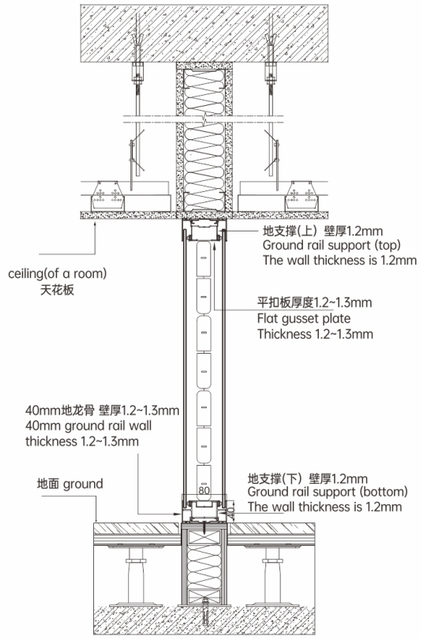

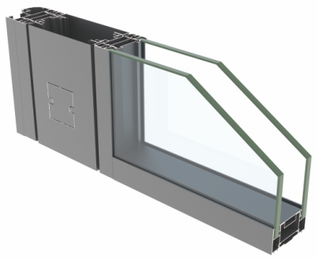

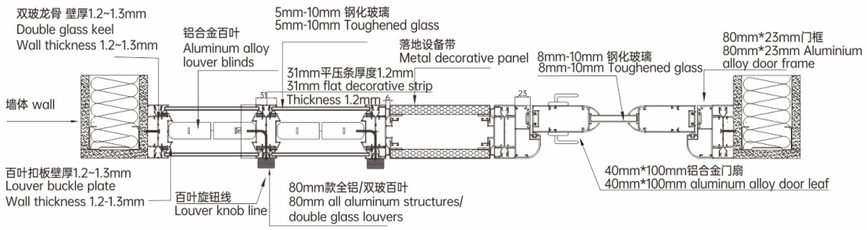

Outline
the perfect space
勾勒出完美空间

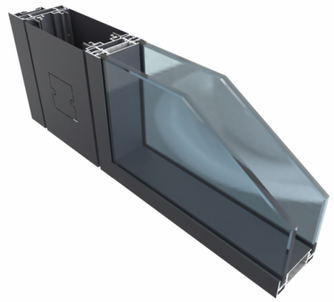

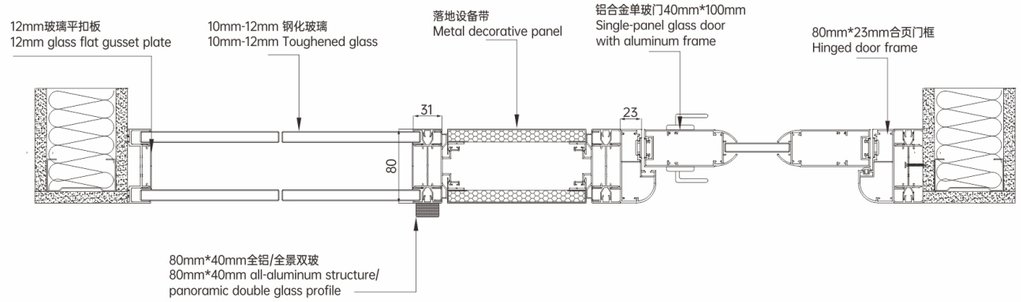

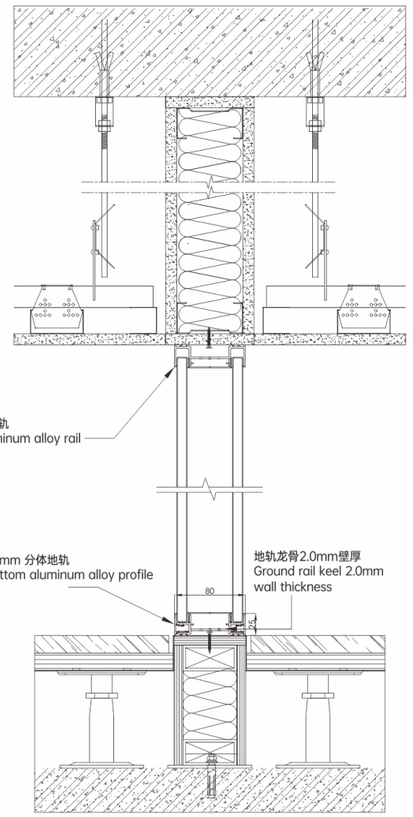

办公隔断系列 **Office** Partition
80款全景双玻
80mm panoramic double glass
< 全铝结构(直角)
Full-Aluminum Structure (Right Angle)

Outline
the perfect space
勾勒出完美空间

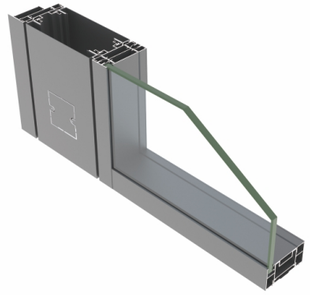

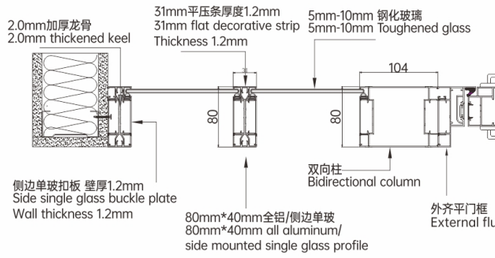

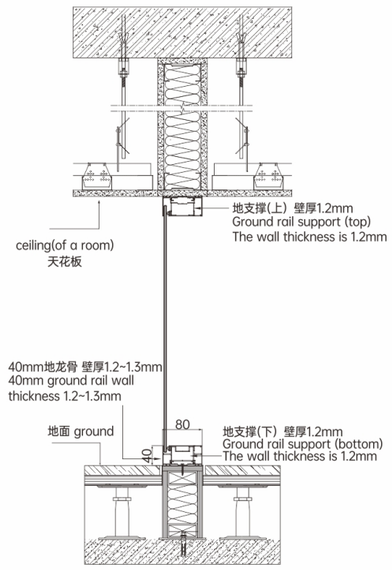

侧边单玻
Side single glass
80款(80mm)

办公隔断系列 **Office** Partition

< 全铝结构(直角)

Full-Aluminum Structure (Right Angle)

80款侧边单玻
80mm side single glass

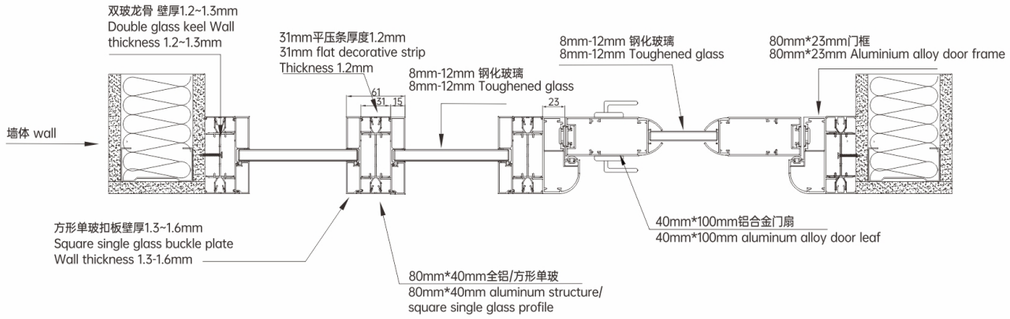

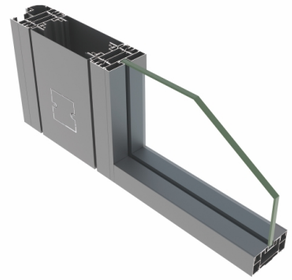

Green building materials,

long service life

绿色环保建材，使用寿命长

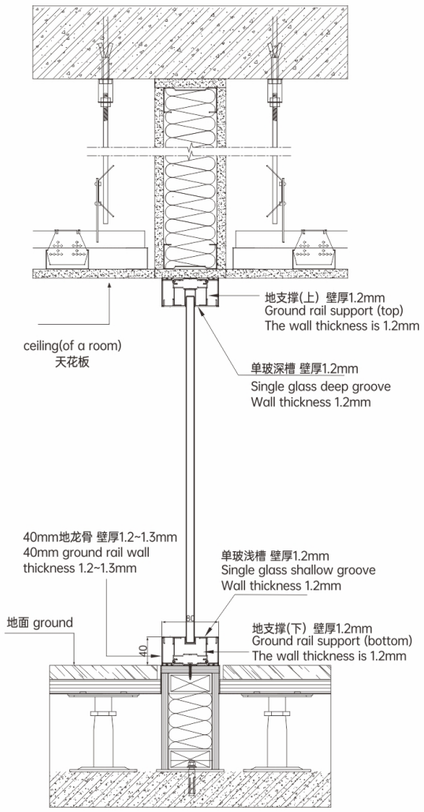

办公隔断系列 **Office** Partition

全铝结构(直角)>

Full-Aluminum Structure (Right Angle)

80款弧形单玻

80mm curved single glass

弧形单玻
Curved single glass
80款(80mm)

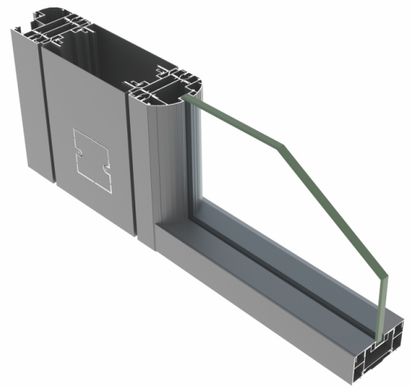

Simple lines,

beautiful space　简约线条，优美空间

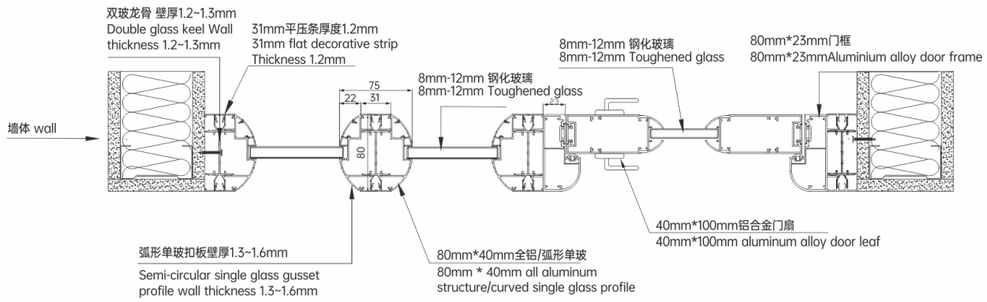

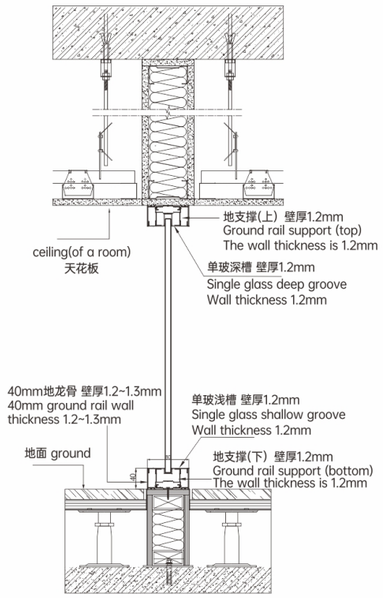

办公隔断系列 **Office** Partition

全铝结构(直角)>

Full-Aluminum Structure (Right Angle)

80款菱形单玻

80mm rhombic single glass

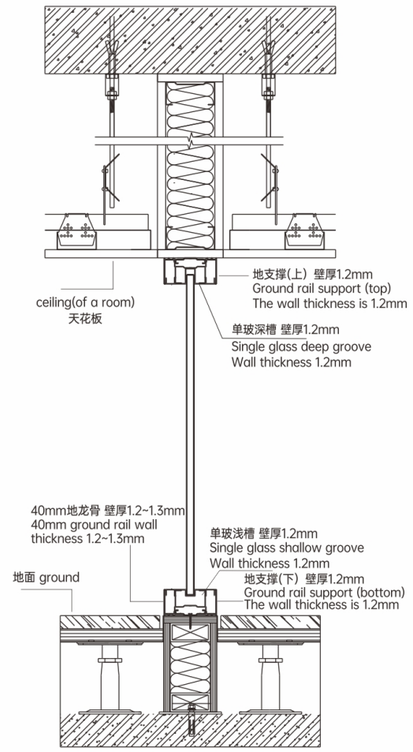

Modern, classic

streamlined design style

现代、经典的流线设计风格

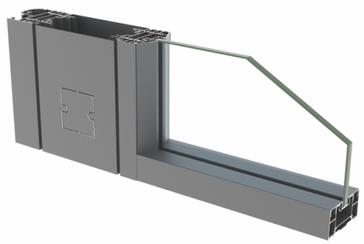

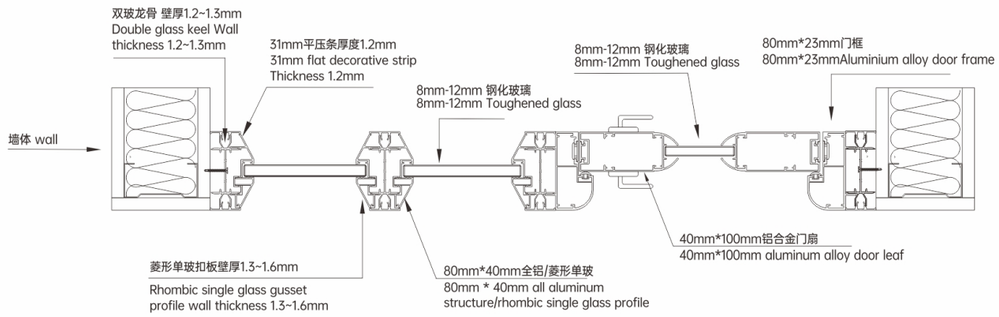

办公隔断系列 **Office** Partition

全铝结构(直角)>

Full-Aluminum Structure (Right Angle)

80款四合一单玻

80mm four in one single glass

Outline

the perfect space

勾勒出完美空间

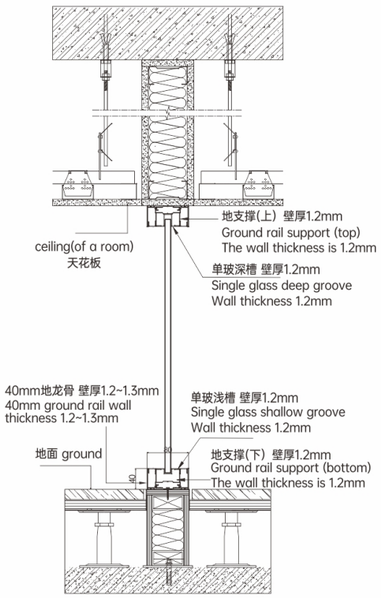

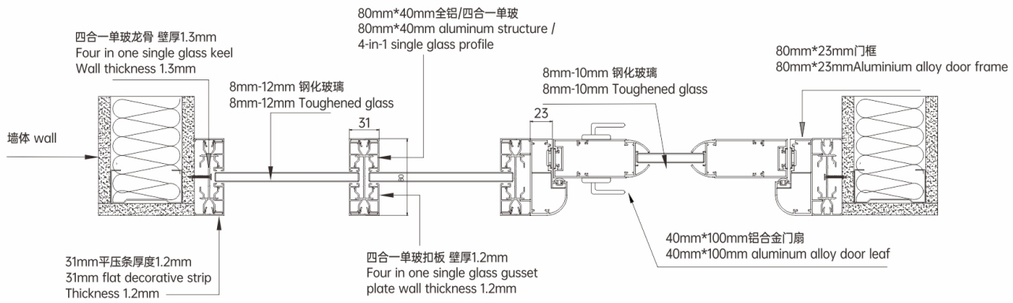

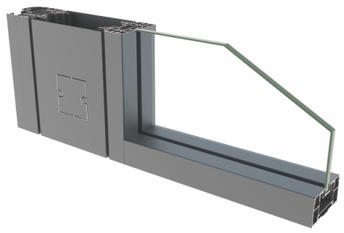

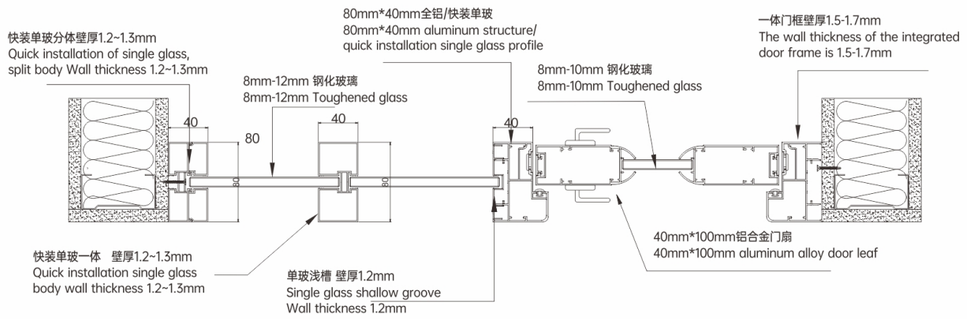

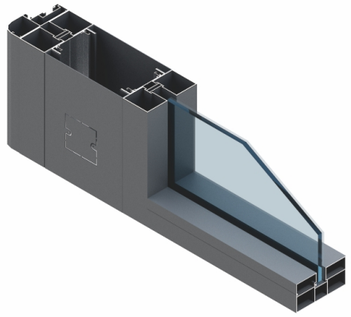

Simple lines,
meticulous craftsmanship
简洁的线条，细致的工艺

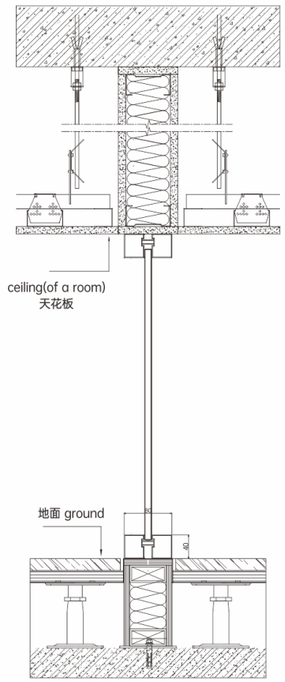

办公隔断系列 **Office** Partition

全铝结构(直角) >
Full-Aluminum Structure (Right Angle)

80款一体单玻
80mm Integrated single glass

办公隔断系列 **Office** Partition

全铝结构(直角) >

Full-Aluminum Structure (Right Angle)

80款暗藏推拉门

80mm hidden sliding door

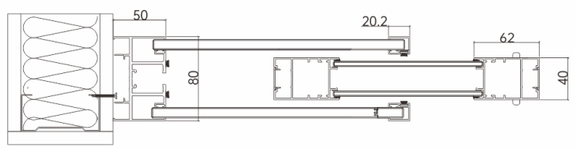

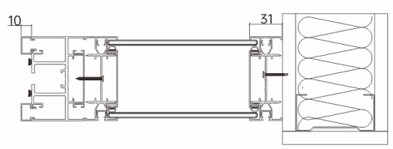

Green building materials,

long service life

绿色环保建材，使用寿命长

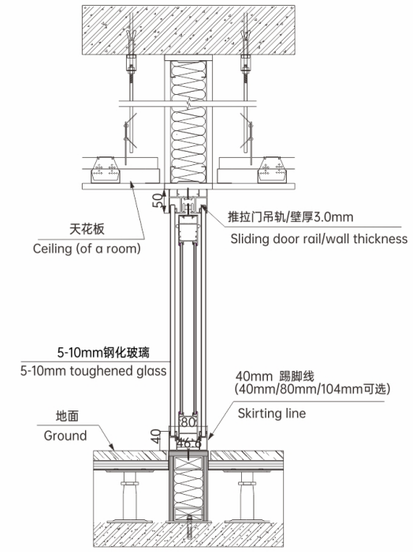

80款暗藏推拉门 组装示意图

80mm hidden sliding door assembly diagram

Streamline design style,

Create creative space

流线设计风格，创造创意空间

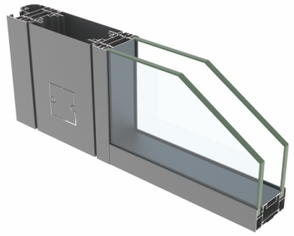

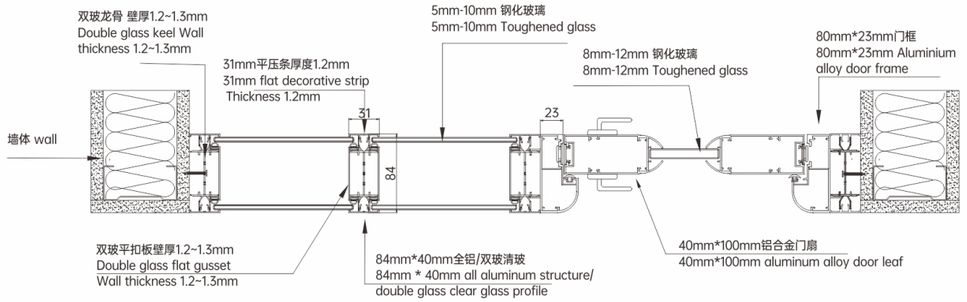

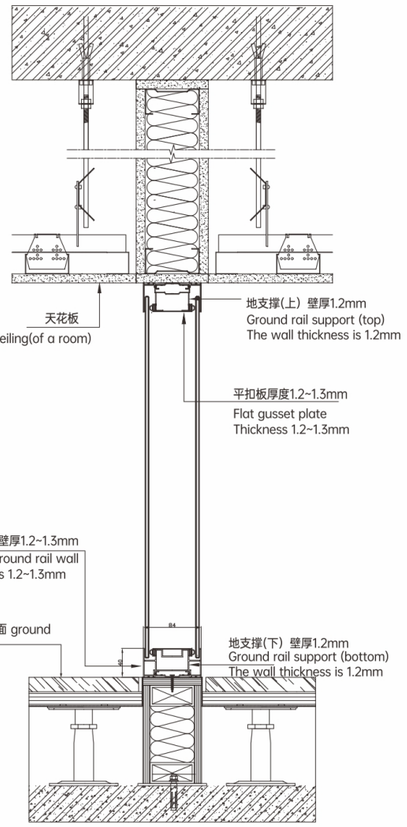

84款双玻
84mm double glass

办公隔断系列 **Office** Partition

< 全铝结构(直角)

Full-Aluminum Structure (Right Angle)

办公隔断系列 **Office** Partition

全铝结构(直角) >

Full-Aluminum Structure (Right Angle)

84款四合一单玻

84mm four in one single glass

Streamline design style,

Create creative space

流线设计风格，创造创意空间

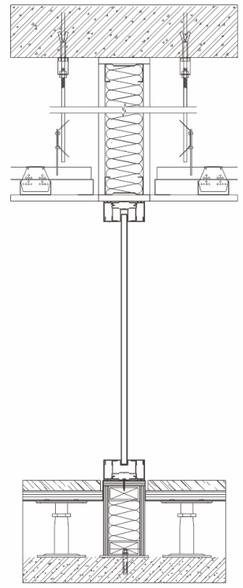

84款四合一单玻组装示意图

84mm four in one single glass assembly diagram

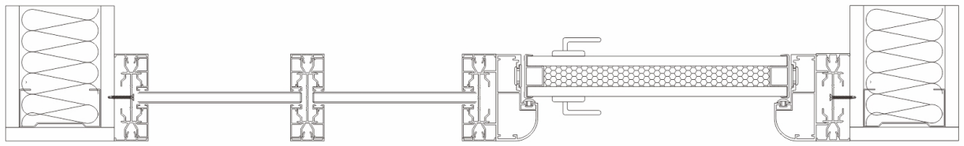

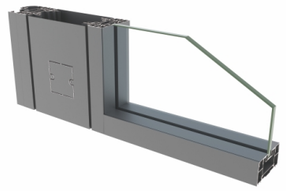

Green building materials,

long service life

绿色环保建材，使用寿命长

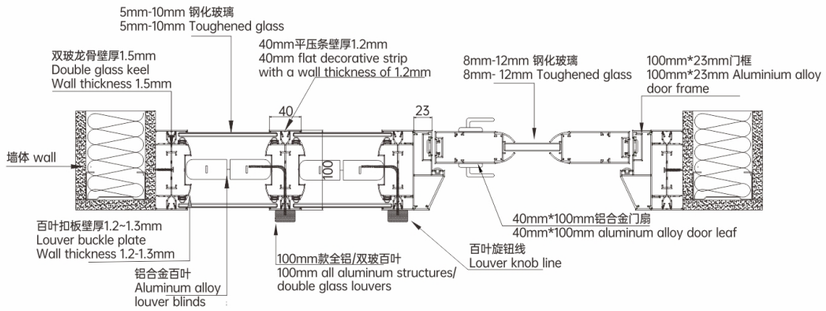

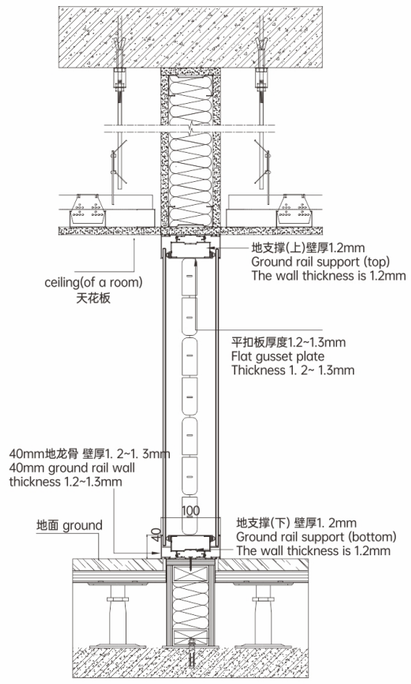

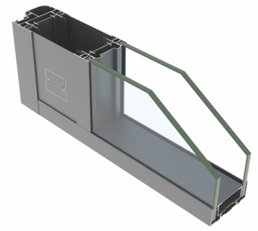

办公隔断系列 **Office** Partition

全铝结构(直角) >

Full-Aluminum Structure (Right Angle)

100款百叶双玻

100mm double glass with louver blinds

办公隔断系列 **Office** Partition

全铝结构(直角)>

Full-Aluminum Structure (Right Angle)

100款双玻全景

100mm panoramic double glass

双玻全景

Panoramic double glass

100款(100mm)

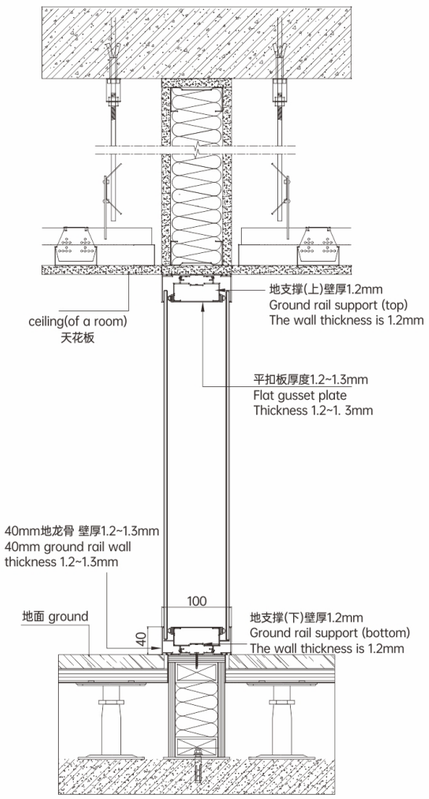

Ideal space,

Show the simplicity and rationality of modern office

理想的空间，展现现代办公室的简约与理性

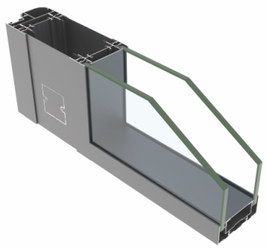

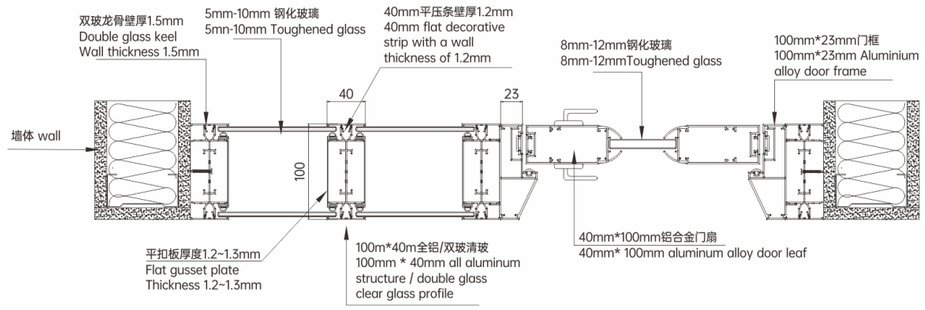

办公隔断系列 **Office** Partition

全铝结构（直角）>

Full-Aluminum Structure (Right Angle)

100款侧边单玻

100mm side single glass

侧边单玻

Side single glass

100款(100mm)

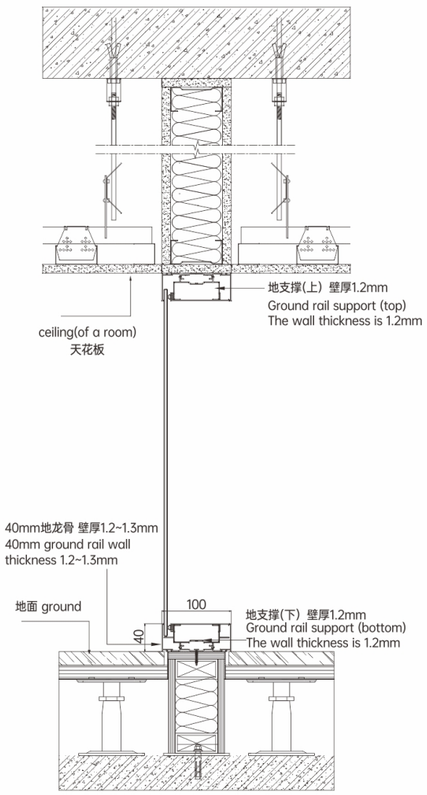

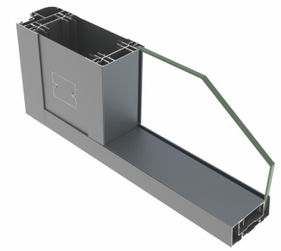

Simple lines,

beautiful space 简约线条，优美空间

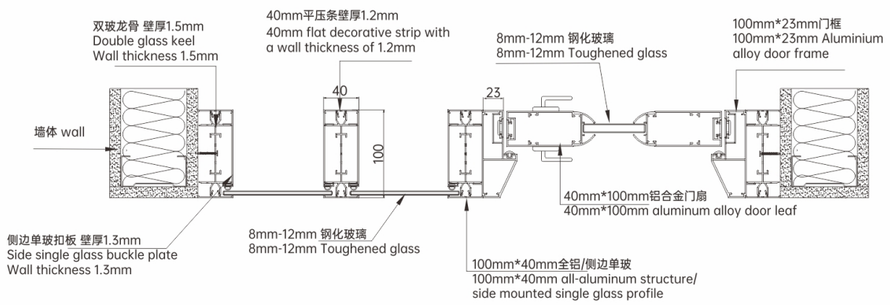

Ideal space,

Show the simplicity and rationality of modern office

理想的空间，展现现代办公室的简约与理性

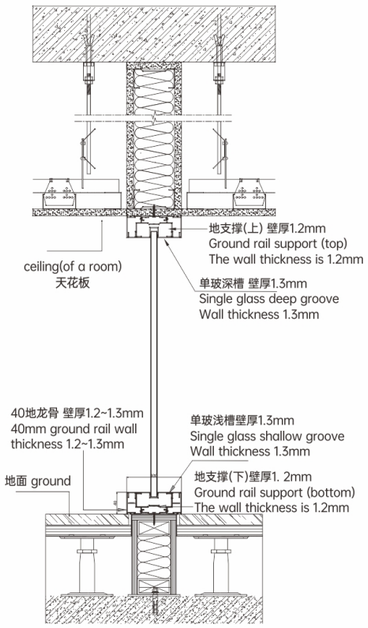

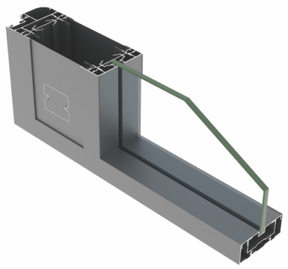

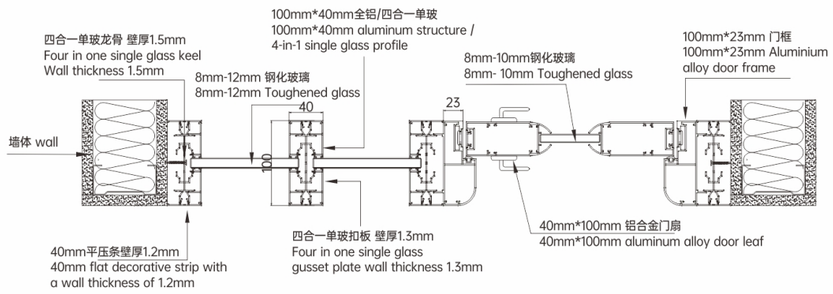

办公隔断系列 **Office** Partition

< 全铝结构(直角)

Full-Aluminum Structure (Right Angle)

100款四合一单玻

100mm four in one single glass

办公隔断系列 **Office** Partition

全铝结构(直角) >

Full-Aluminum Structure (Right Angle)

108款百叶双玻

108mm double glass with louver blinds

Green building materials,

long service life

绿色环保建材，使用寿命长

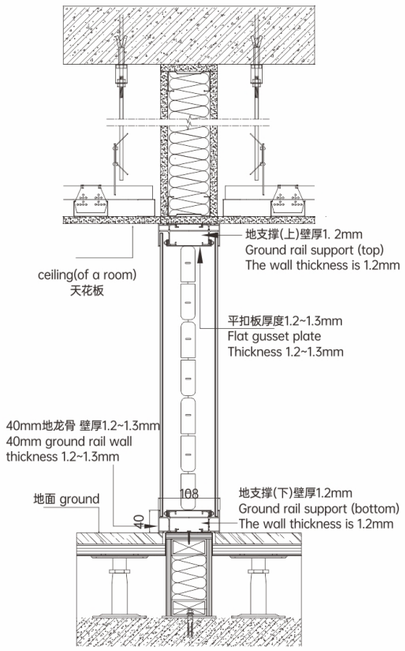

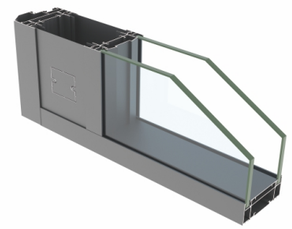

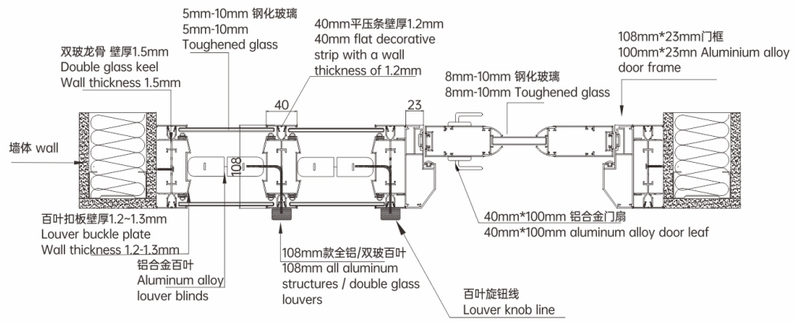

Elegant and unique designs

often make a difference

高雅独特的设计往往会不同凡响

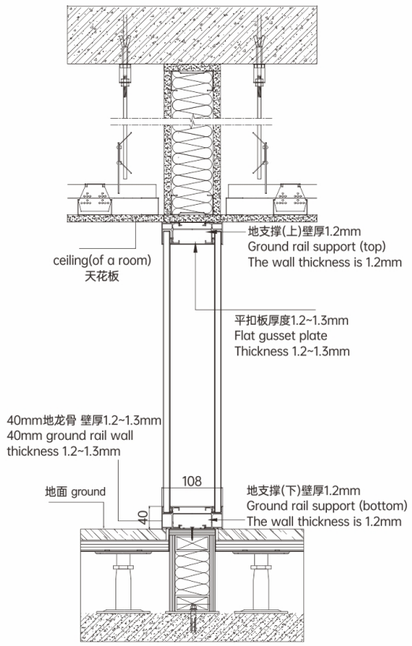

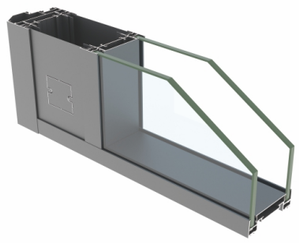

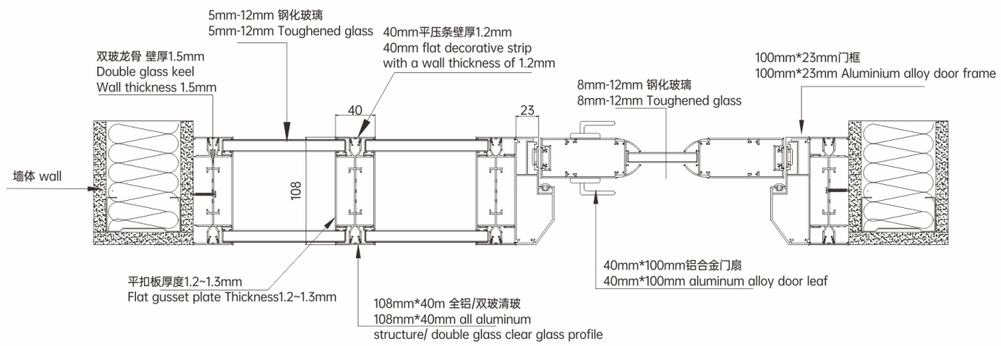

办公隔断系列 **Office** Partition

全铝结构(直角)>

Full-Aluminum Structure (Right Angle)

108款四合一单玻

108mm four in one single glass

Streamline design style,

Create creative space

流线设计风格，创造创意空间

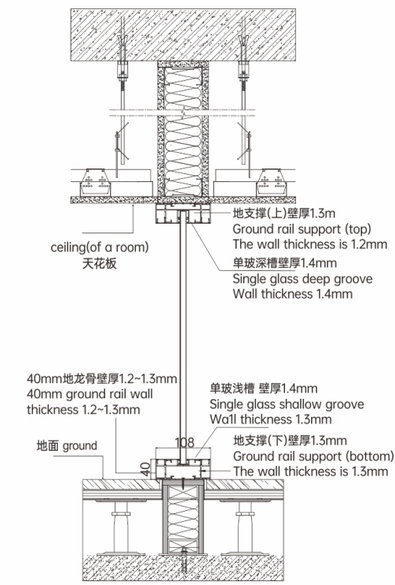

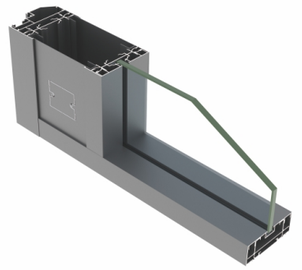

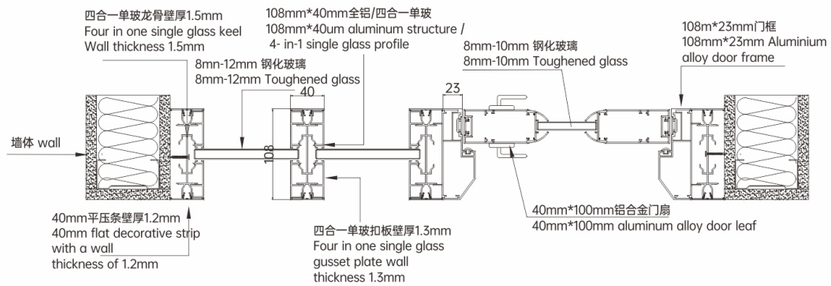

Simple lines,

beautiful space

简约线条，优美空间

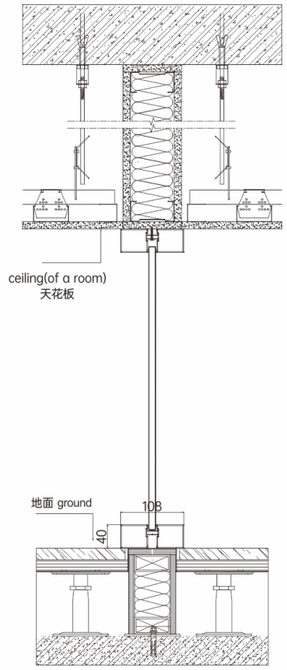

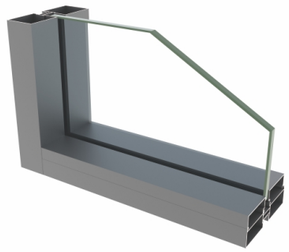

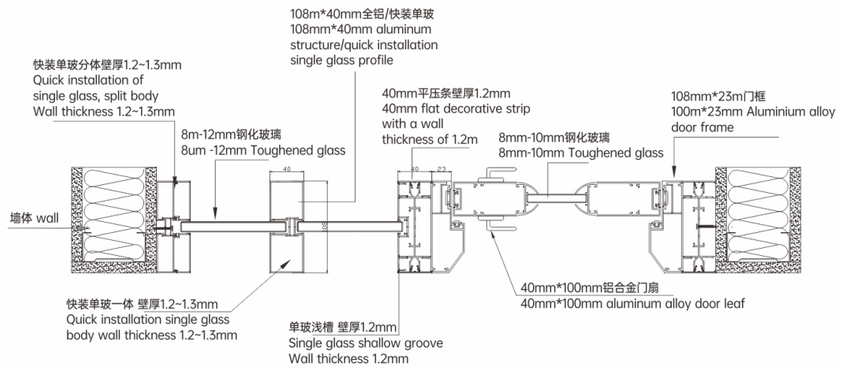

一体单玻
Integrated single glass
108款(108mm)

108款一体单玻
108mm Integrated single glass

办公隔断系列 **Office** Partition

< 全铝结构（直角）
Full-Aluminum Structure (Right Angle)

Outline
the perfect space
勾勒出完美空间

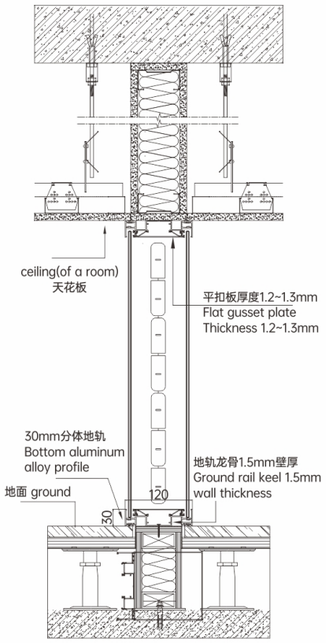

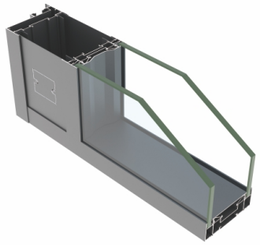

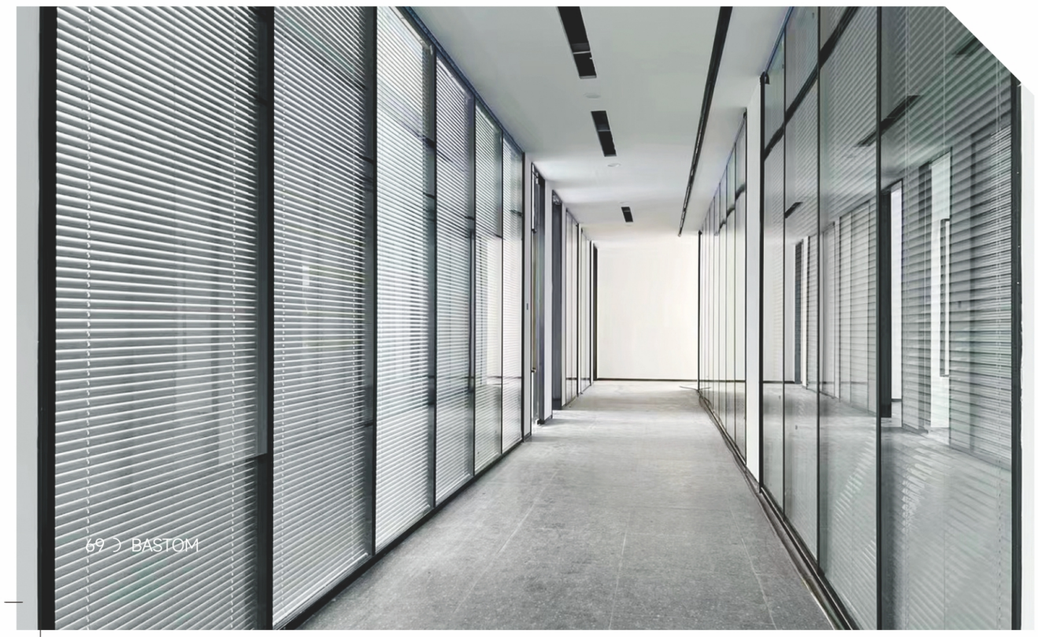

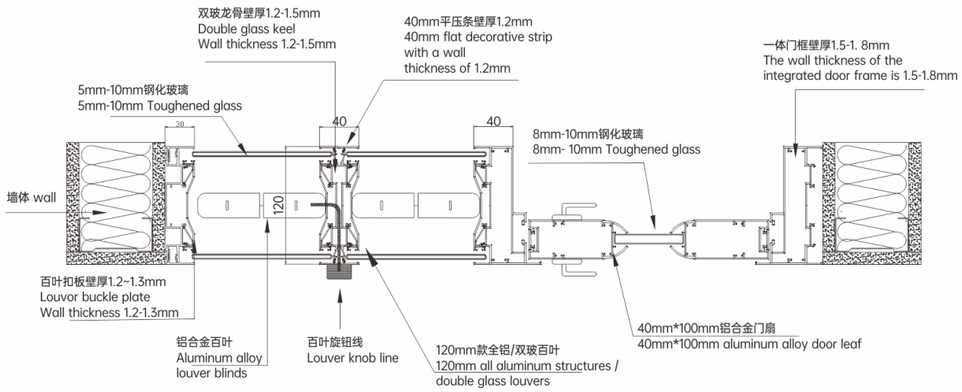

办公隔断系列 **Office** Partition

全铝结构（直角）>

Full-Aluminum Structure (Right Angle)

120款双玻全景

120mm panoramic double glass

双玻全景

Panoramic double glass

120款(120mm)

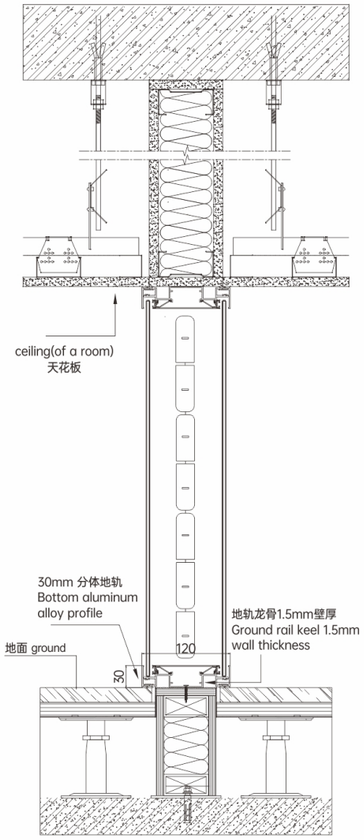

Green building materials,

long service life

绿色环保建材，使用寿命长

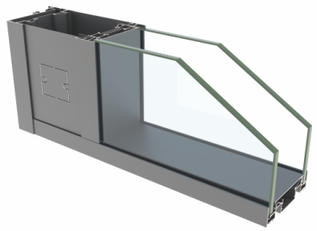

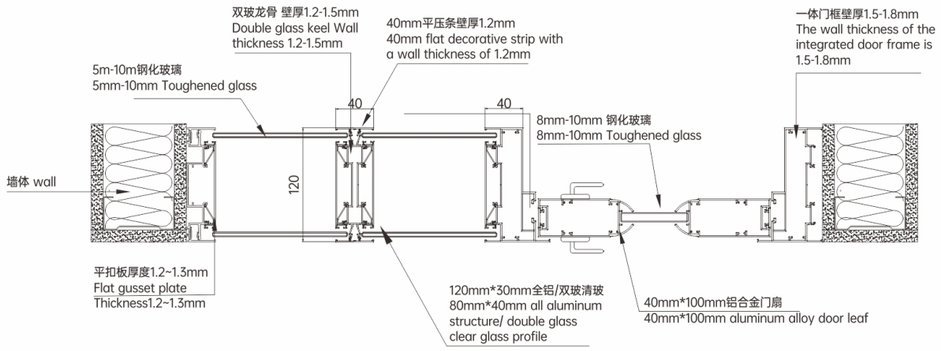

Simple lines,

beautiful space　简约线条，优美空间

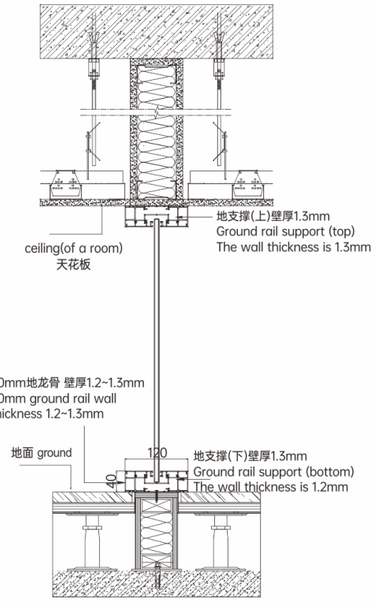

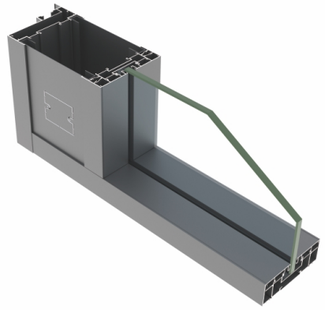

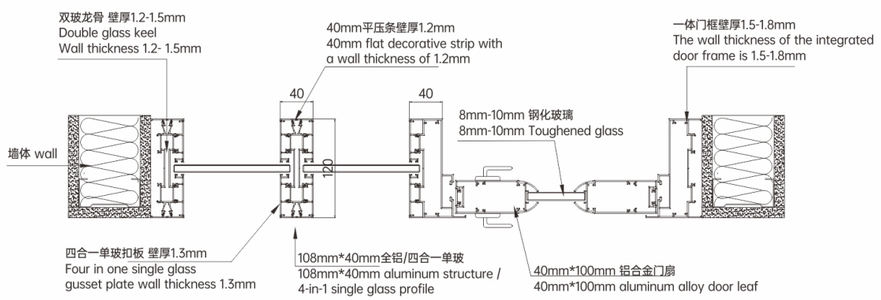

办公隔断系列 **Office** Partition

120款四合一单玻
120mm four in one single glass

全铝结构(直角)
Full-Aluminum Structure (Right Angle)

全铝结构（直角）截面图 26款

26mm Full-Aluminum Structure (Right-Angle) Cross-Sectional Drawings

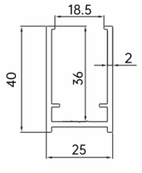

26款地槽
26mm floor gutters

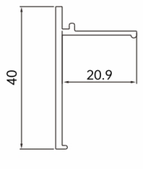

26款天曹-A槽
26mm ceiling gutters - A-gutter

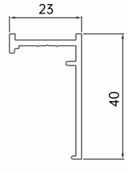

26款天槽-B槽
26mm ceiling gutters - B-gutter

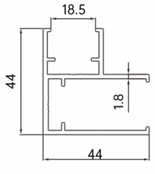

26款转角柱
26mm corner column

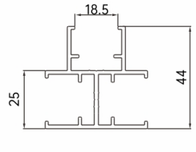

26款三项柱
26mm three-way columns

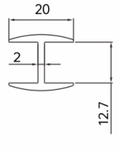

工字铝
I-Beams

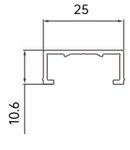

26门框转接条
26mm door frame adapter strip

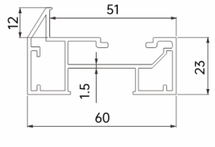

26款转接门框
26mm adapter door frame

全铝结构（直角）截面图 40款

40mm Full-Aluminum Structure (Right-Angle) Cross-Sectional Drawings

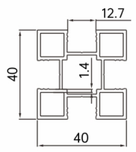

一体单玻四向柱
Integrated single glass four-way columns

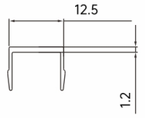

一体单玻收口条
Integrated single glass Finish strip

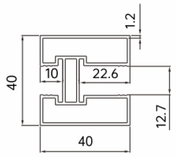

40*40一体单玻
40*40 Integrated single glass

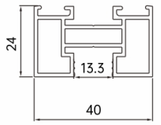

40单玻分体槽
40mm single glass split gutters

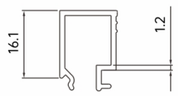

40单玻分体压线
40mm single glass split molding

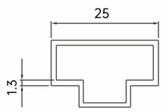

一体单玻门框定位条
Integrated single glass door frame positioning strips

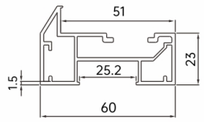

40款转接门框
40mm adapter door frames

全铝结构（直角）截面图 60款

60mm Full-Aluminum Structure (Right-Angle) Cross-Sectional Drawings

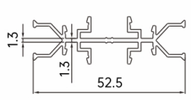

龙骨
Keel

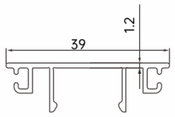

平面扣板
Flat gusset plate

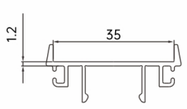

百叶扣板
Louvre gusset plate

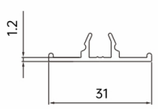

平压条
Flat molding

全铝结构（直角）截面图 60款

60mm Full-Aluminum Structure (Right-Angle) Cross-Sectional Drawings

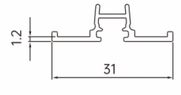

带槽压条
Grooved molding

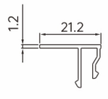

单玻压线
Single glass molding

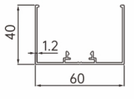

地龙骨
Floor keel

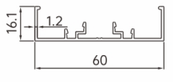

转接龙骨
Adapter keel

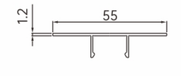

收边扣板
Edge trim gusset plate

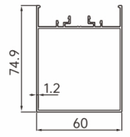

单向柱
One-way column

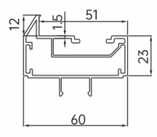

平开门框
Hinged door frame

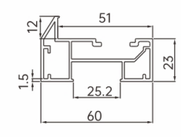

60款无牙门框
60mm toothless door frame

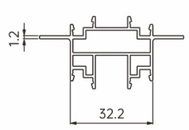

地支撑
Floor support

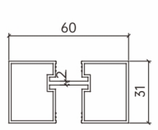

30一体单玻
30mm Integrated single glass

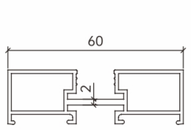

单玻分体槽
Single glass split gutter

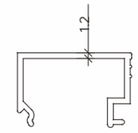

单玻分体压线
Single glass split molding

全铝结构（直角）截面图 80款

80mm Full-Aluminum Structure (Right-Angle) Cross-Sectional Drawings

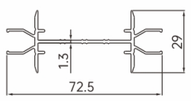

1.3mm双玻龙骨
1.3mm double glass keel

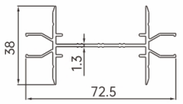

40mm-双玻龙骨
40mm- double glass keel

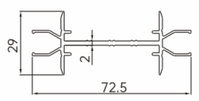

2.0双玻龙骨
2.0mm double glass keel

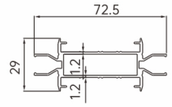

双筋1.2mm龙骨
Double-reinforced 1.2mm keel

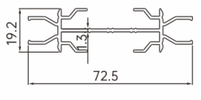

四合一单玻龙骨
Four-in-one single glass keel

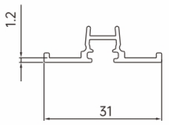

31mm带槽压条
31mm grooved molding

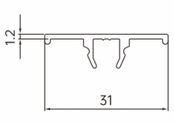

31mm平压条
31mm flat molding

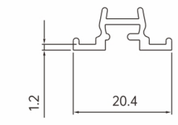

20mm带槽压条
20mm grooved molding

全铝结构（直角）截面图 80款

80mm Full-Aluminum Structure (Right-Angle) Cross-Sectional Drawings

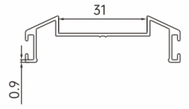

百叶扣板
Louvre gusset plate

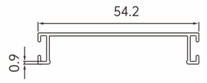

平扣板
Flat gusset plate

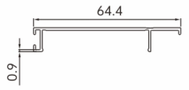

侧边单玻扣板
Side single glass gusset plate

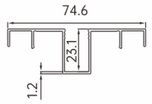

单玻深槽
Single glass deep groove

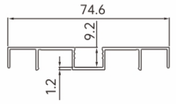

单玻浅槽
Single glass shallow groove

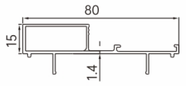

方形单玻扣板
Square single glass gusset plate

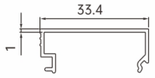

方形单玻压条
Square single glass molding

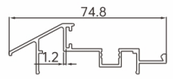

菱形单玻扣板
Rhombic single glass gusset plate

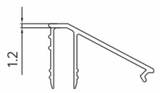

菱形单玻压条
Rhombic single glass molding

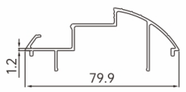

弧形单玻扣板
Curved single glass gusset plate

弧形单玻压条
Curved single glass molding

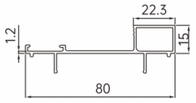

磁控单玻扣板
Magnetic control single glass gusset plate

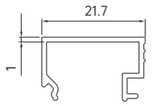

磁控单玻压条
Magnetic control single glass molding

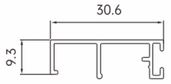

四合一单玻扣板
Four-in-one single glass gusset plate

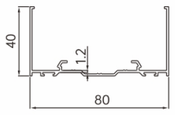

40mm地龙骨
40mm floor keel

收边扣板
Edge trim gusset plate

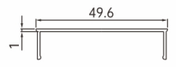

12mm平扣板
12mm flat gusset plate

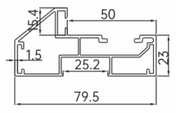

无牙菱形门框
Rhombic toothless door frame

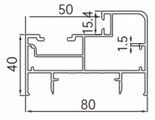

一体门框
Integrated door frame

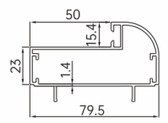

50mm-平开门框
50mm casement door frame

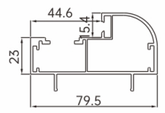

平开门框
Hinged door frame

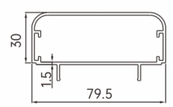

地弹簧门框
Floor spring door frame

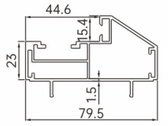

菱形门框
Rhombic door frame

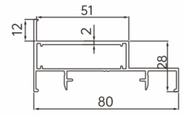

外齐平门框（一体）
External flush door frame (integrated)

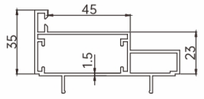

外齐平门框
External flush door frame

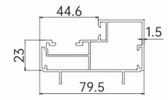

直角门框
Right-angle door frame

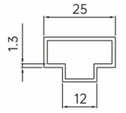

一体单玻门框定位条
Integrated single glass door frame positioning strip

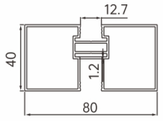

80*40一体单玻
80*40mm integrated single glass

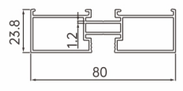

快装单玻分体扣板
Quick-install single glass split gusset plate

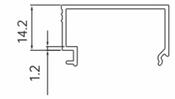

快装单玻分体压条
Quick-install single glass split molding

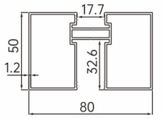

80*50一体单玻
80*50mm integrated single glass

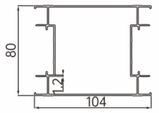

双向柱
Two-way column

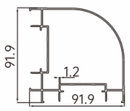

转角柱
Corner column

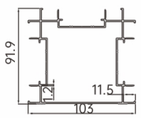

三向柱
Three-way column

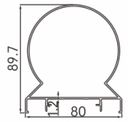

万能柱
Universal column

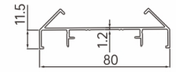

转角龙骨
Corner keel

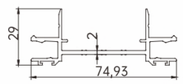

2.0全景分体龙骨
2.0mm panoramic split keel

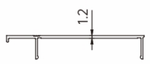

12mm侧边扣板
12mm side gusset plate

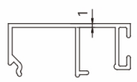

25mm磁控压条
25mmm magnetically controlled molding

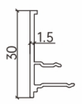

30全景玻璃压线
30 panoramic glass molding

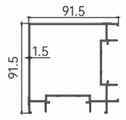

方型转角
Square corner

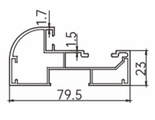

弧面无牙门框
Curved toothless door frame

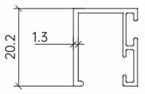

推拉门玻璃收口
Sliding door glass end cap

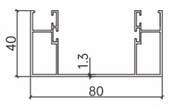

推拉门地轨
Sliding door floor track

全铝结构（直角）截面图 80款

80mm Full-Aluminum Structure (Right-Angle) Cross-Sectional Drawings

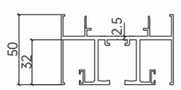

推拉门吊轨
Sliding door rails

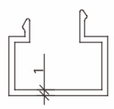

推拉门吊脚收口
Sliding door rails end cap

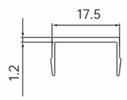

80*50一体单玻收口条
80*50 integrated single glass finish strip

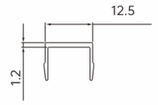

80*40一体单玻收口条
80*40 integrated single glass finish strip

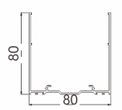

80mm高地龙骨
80mm high floor keel

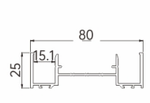

25mm高全景专用地龙骨
25mm high panoramic floor keel

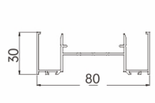

30mm高全景专用地龙骨
30mm high panoramic floor keel

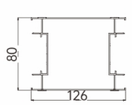

126mm宽双向柱
126mm wide bidirectional column

全铝结构（直角）截面图 100款

100mm Full-Aluminum Structure (Right-Angle) Cross-Sectional Drawings

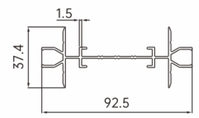

双玻龙骨
Double glass keel

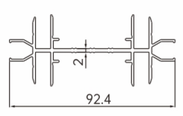

12mm侧边单玻龙骨
12mm side single glass keel

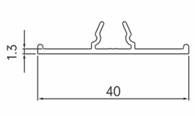

40mm平压条
40mm flat molding

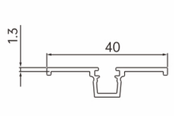

40mm带槽压条
40mm grooved molding

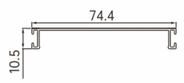

平扣板
Flat gusset plate

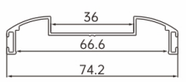

百叶扣板
Louvre gusset plate

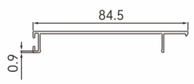

侧边单玻扣板
Side single glass gusset plate

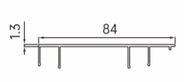

12mm侧边单玻扣板
12mm side single glass gusset plate

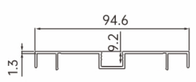

单玻浅槽
Single glass shallow groove

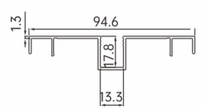

单玻深槽
Single glass deep groove

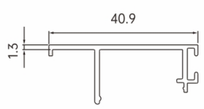

四合一单玻扣板
Four-in-one single glass gusset plate

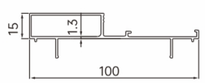

方形单玻扣板
Square single glass gusset plate

全铝结构（直角）截面图 100款

100mm Full-Aluminum Structure (Right-Angle) Cross-Sectional Drawings

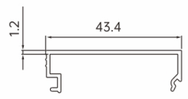

方形单玻压条
Square single glass molding

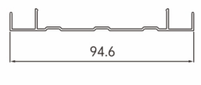

收边扣板
Edge trim gusset plate

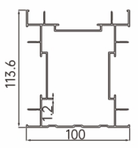

三向柱
Three-way column

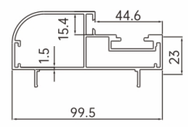

平开门框
Hinged door frame

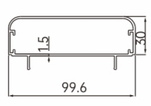

地弹簧门框
Floor spring door frame

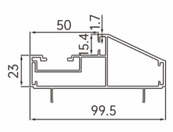

50mm-菱形门框
50mm rhombic door frame

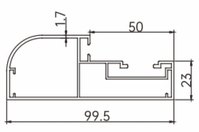

弧面无牙门框
Curved toothless door frame

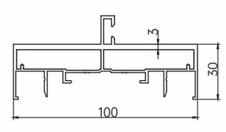

一体居中门框
Integrated centered door frame

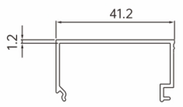

100*50单玻压线
100*50 single glass molding

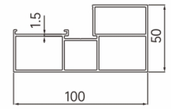

100*50单玻底座
100*50 single glass base

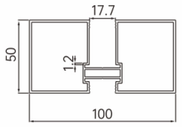

100*50一体单玻
100*50 integrated single glass

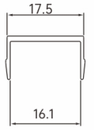

100*50一体单玻收口条
100*50 integrated single glass finish strip

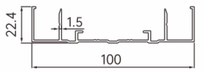

收边龙骨
Edge trim keel

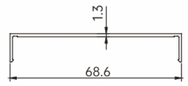

12mm全景扣板
12mm panoramic gusset plate

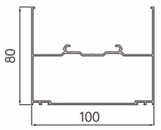

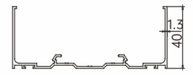

40地龙骨
40mm floor track

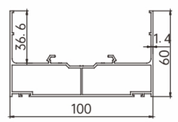

60地龙骨
60mm floor track

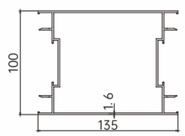

135双向住
135mm two-way column

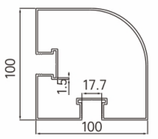

单玻弧形转角柱
single glass curved corner column

全铝结构（直角）截面图 108款

108mm Full-aluminum structure (right angle) Cross-Sectional Drawings

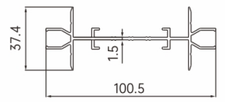

双玻龙骨
Double glass keel

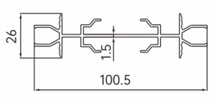

四合一单玻龙骨
Four-in-one single glass keel

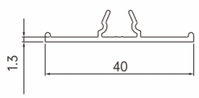

40mm平压条
40mm flat molding

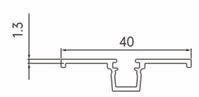

40mm带槽压条
40mm grooved molding

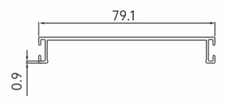

平扣板
Flat gusset plate

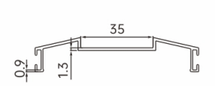

百叶扣板
Louver gusset plate

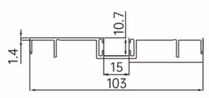

单玻浅槽
Single glass shallow groove

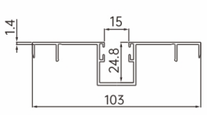

单玻深槽
Single glass deep groove

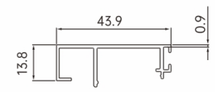

四合一单玻扣板
Four-in-one single glass gusset plate

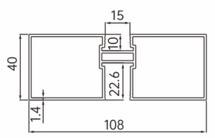

快装单玻一体
Quick-install single glass integrated gusset plate

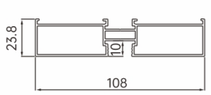

快装单玻分体扣板
Quick-install single glass split gusset plate

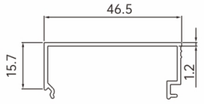

快装单玻分体压条
Quick-install single glass split molding

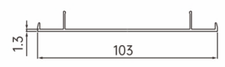

收边扣板
Edge trim gusset plate

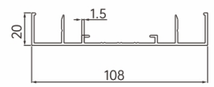

收边龙骨
Edge trim keel

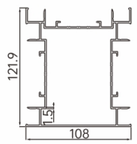

三向柱
Three-way columns

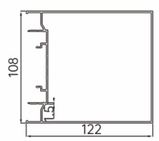

单向柱
One-way column

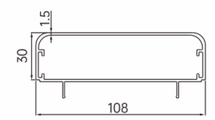

地弹簧门框
Floor spring door frame

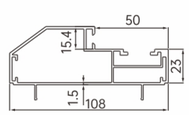

50mm-菱形门框
50mm rhombic door frame

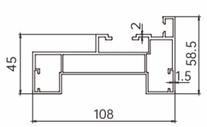

外齐平门框
External flush door frame

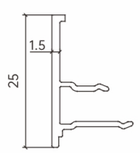

25分体压线
25mm split molding

全铝结构（直角）截面图 108款

108mm Full-aluminum structure (right angle) Cross-Sectional Drawings

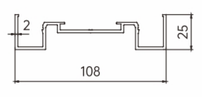

25全景地轨
25mm panoramic floor rail

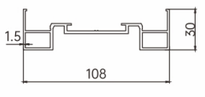

30全景地轨
30mm panoramic floor rail

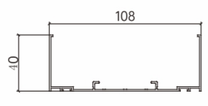

地龙骨
Floor keel

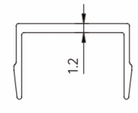

快装单玻收口
Floor keel

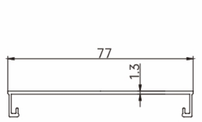

25全景双玻内扣板
25mm panoramic double glass internal gusset plate

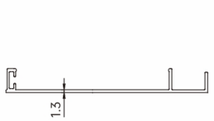

全景侧边内扣板
Panoramic side internal gusset plate

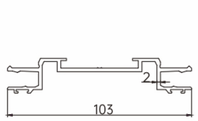

全景分体龙骨
Panoramic split keel

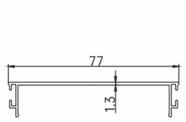

全景双玻内扣板
Panoramic double glass internal gusset plate

全铝结构（直角）截面图 120款

120mm Full-aluminum structure (right angle) Cross-Sectional Drawings

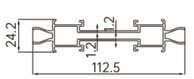

双玻龙骨
Double glass keel

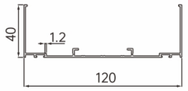

天地龙骨
Ceiling and floor keel

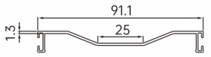

内凹扣板
Concave gusset plate

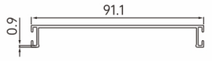

平扣板
Flat gusset plate

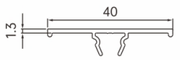

40mm平压条
40mm flat molding

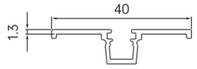

40mm带槽压条
40mm grooved molding

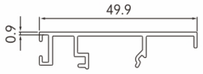

单玻扣板
Single glass gusset plate

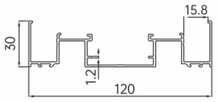

30mm侧接龙骨
30mm side keel

全铝结构（直角）截面图 120款

120mm Full-aluminum structure (right angle) Cross-Sectional Drawings

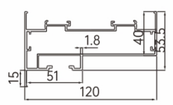

外齐平门框
External flush door frame

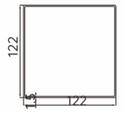

122*122方管
122*122 square tube

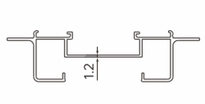

地支撑
Floor support

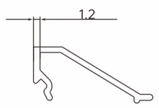

扣板支撑
Gusset plate support

30mm分体压线
30mm split molding

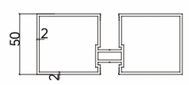

50一体单玻
50mm integrated single glass

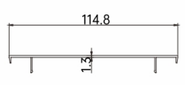

收边扣板
Edge trim gusset

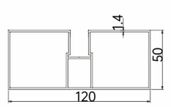

一体单玻单边槽
Integrated single glass single-edge groove

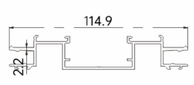

120款全景分体龙骨
120mm panoramic split keel

全铝结构（直角）截面图 通用门扇

Full-aluminum structure (right angle) Cross-Sectional Drawings, universal door leaf

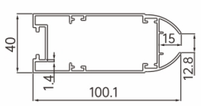

40*100mm单玻门扇
40*100mm single glass door leaf

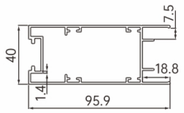

40*100mm双玻门扇
40*100mm double glass door leaf

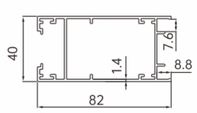

45*80mm双玻门扇
45*80mm double glass door leaf

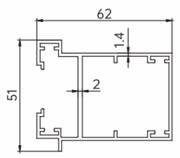

一体隐框门扇
Integrated concealed frame door leaf

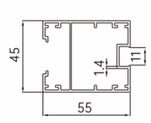

45*55mm单玻门扇
45*55mm single glass door leaf

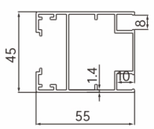

45*55mm双玻门扇
45*55mm double glass door leaf

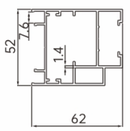

外齐平门扇
External flush door leaf

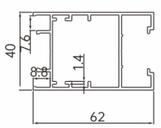

40*60门扇
40*60mm door leaf

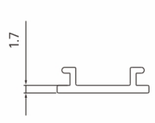

40*100mm门扇压条
40*100mm door leaf molding

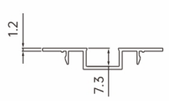

外齐平门扇单玻转换条
Exterior flush door leaf single glass conversion strip

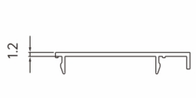

外齐平门扇侧装单玻转换条
Exterior flush door leaf side-mounted single glass conversion strip

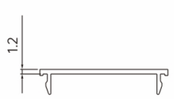

外齐平门扇双玻内收口条
Exterior flush door leaf double glass inner finish strip

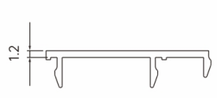

40*60门扇侧装玻璃转换条
40*60mm door leaf side-mounted glass conversion strip

全铝结构（直角）截面图 通用门扇

Full-aluminum structure (right angle) Cross-Sectional Drawings, universal door leaf

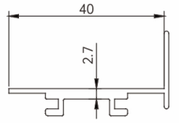

40双开门档
40mm double-leaf door stop

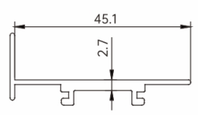

45双开门档
45mm double-leaf door stop

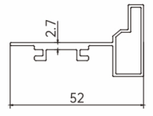

齐平门档
Flush door stop

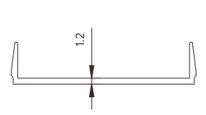

隐框门内收口
Concealed frame door internal trim

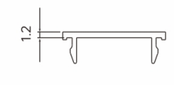

系统双玻门扇内收口条
System double glass door leaf internal finish trip

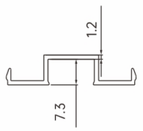

单玻门扇转换条
Single glass door leaf conversion strip

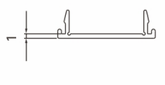

45*55mm门扇压条
45*55mm door leaf molding

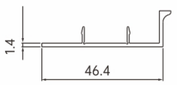

隐框门压条
Concealed frame door molding

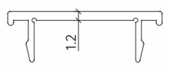

门框收口条
Door frame finish strip

全铝结构（直角）截面图 套装门

Full-aluminum structure (right angle) Cross-Sectional Drawings,Suited door

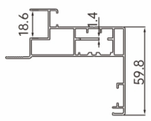

直边主套
Straight edge primary cover

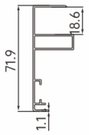

直边副套
Straight edge secondary cover

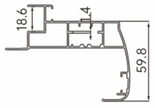

弧面主套
Curved primary cover

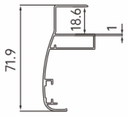

弧面副套
Curved secondary cover

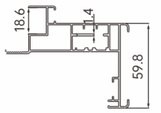

插板主套
Insert plate primary cover

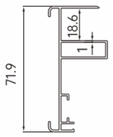

插板副套
Insert plate secondary cover

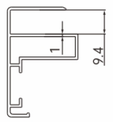

窄边副套
Narrow edge secondary cover

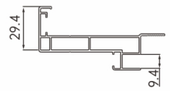

窄边主套
Narrow edge primary cover

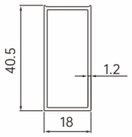

防水槽
Waterproof groove

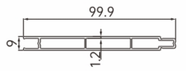

铝合金墙厚板
Aluminum alloy wall plate

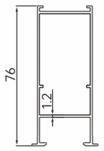

生态门内龙骨
Eco-door inner keel

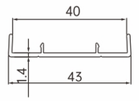

铝合金封边
Aluminum alloy edge banding

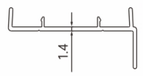

双靠门挡边
Double-side door stop

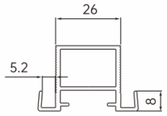

生态门封边5mm
Eco-door edge banding 5mm

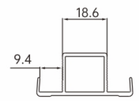

生态门封边9mm
Eco-door edge banding 9mm

Office Partition
办公隔断篇

钢铝结构（内钢外铝45°）
Steel-Aluminum Structure (Inner Steel, Outer Aluminum ,45°)

Steel-Aluminum Structure
(Inner Steel,
Outer Aluminum ,45°)
钢铝结构（内钢外铝45°）

84款(84mm)、92款(92mm)、
100款(100mm)、108款(108mm)

Ideal space,

Show the simplicity and rationality of modern office

理想的空间，展现现代办公室的简约与理性

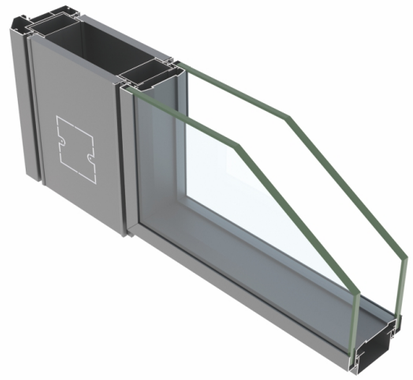

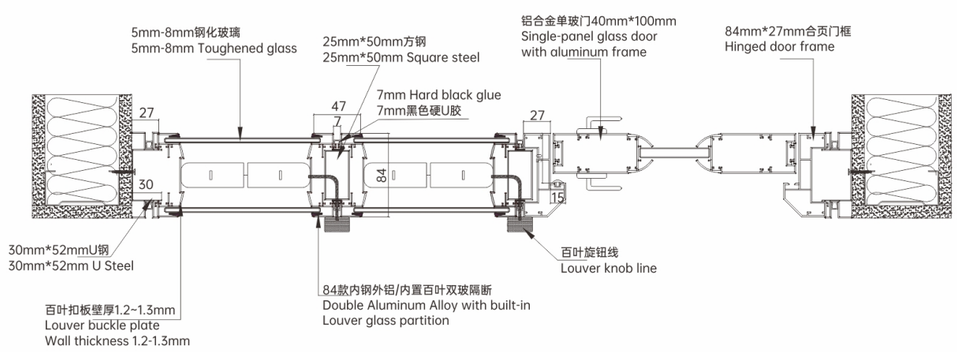

Elegant and unique designs
often make a difference

高雅独特的设计往往会不同凡响

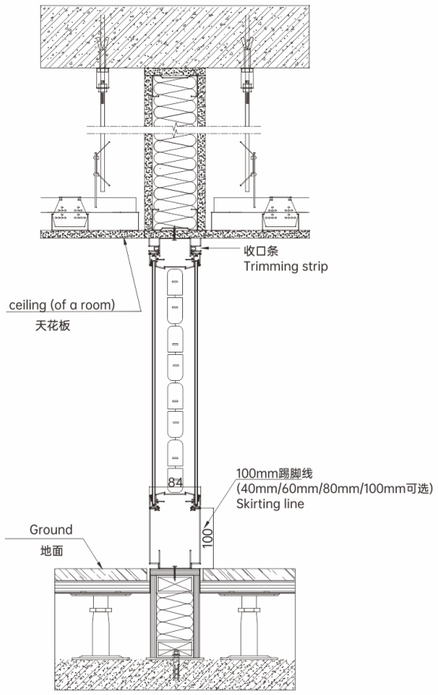

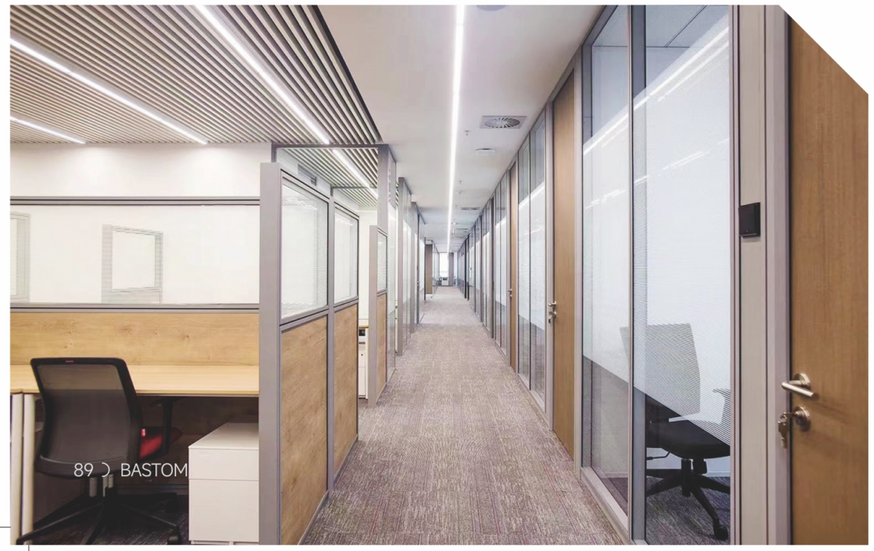

百叶双玻
Double glass with louver blinds
84款(84mm)

Simple lines,

beautiful space　简约线条，优美空间

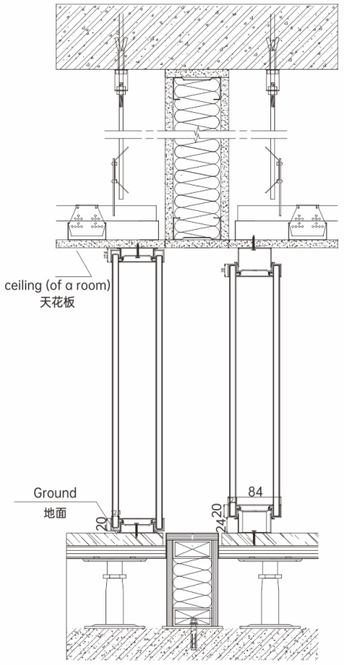

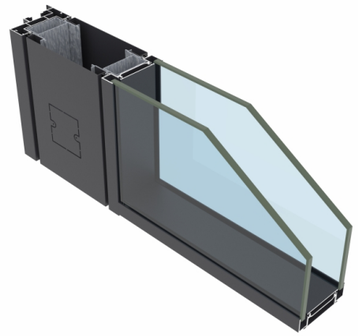

办公隔断系列 **Office** Partition

钢铝结构（内钢外铝45°）>

Steel-Aluminum Structure (Inner Steel, Outer Aluminum ,45°)

84款双玻全景
84mm panoramic double glass

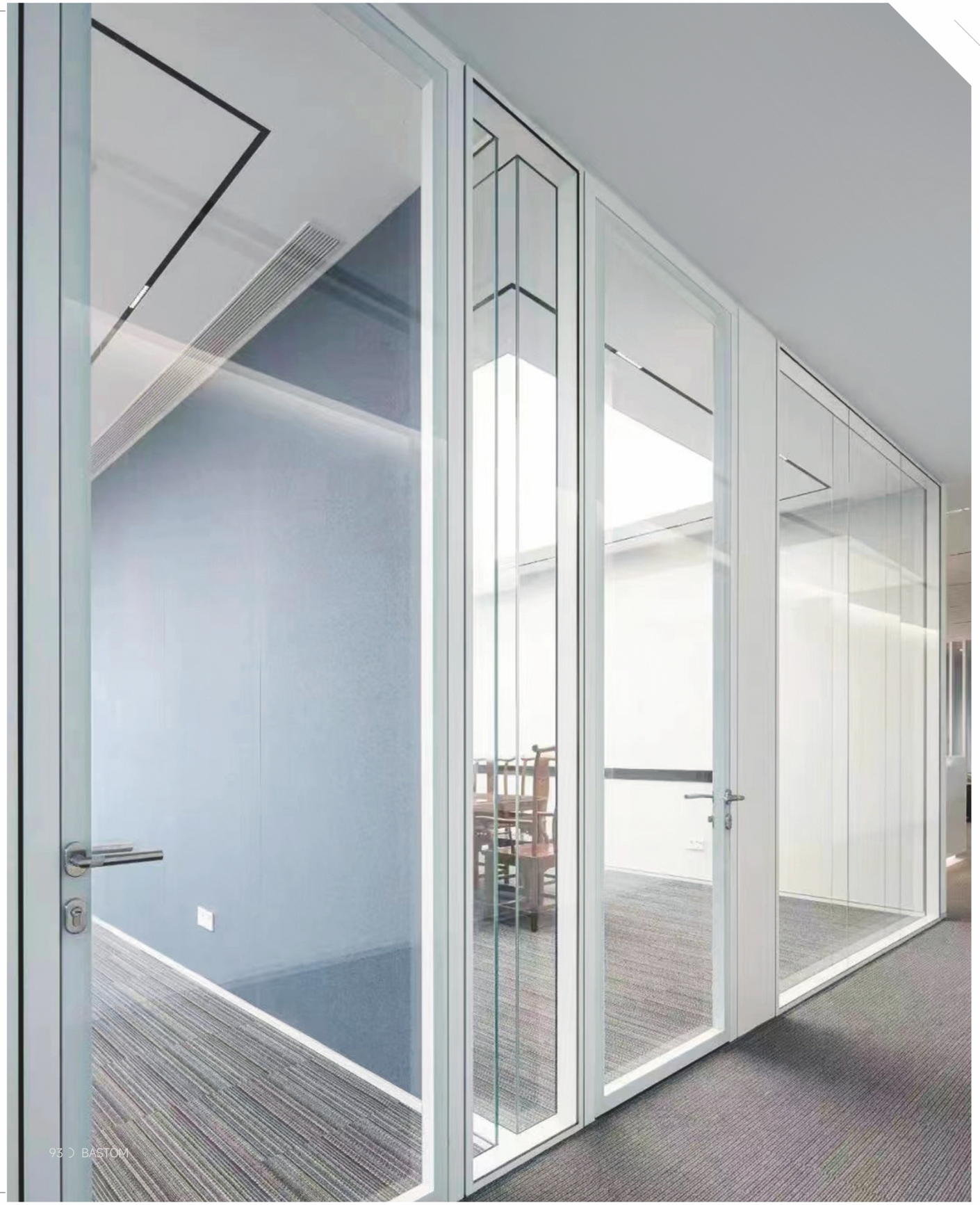

Elegant and unique designs
often make a difference

高雅独特的设计往往会不同凡响

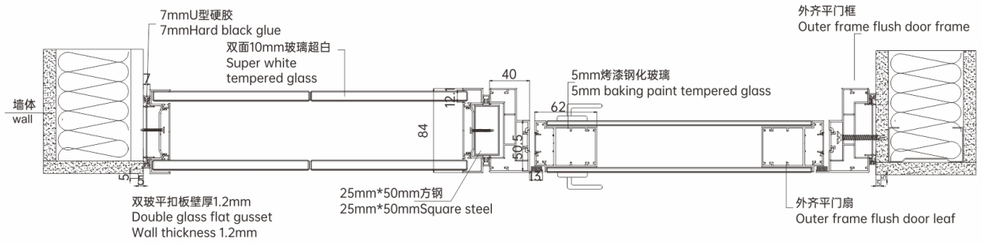

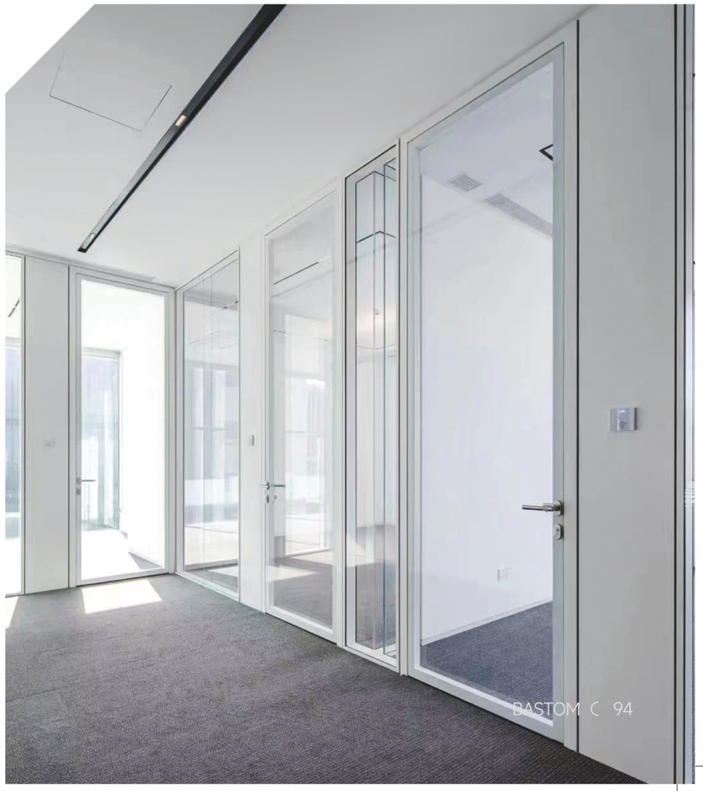

办公隔断系列 **Office** Partition

钢铝结构（内钢外铝45°）>

Steel-Aluminum Structure (Inner Steel, Outer Aluminum ,45°)

84款侧边单玻

84mm side single glass

Modern, classic

streamlined design style

现代、经典的流线设计风格

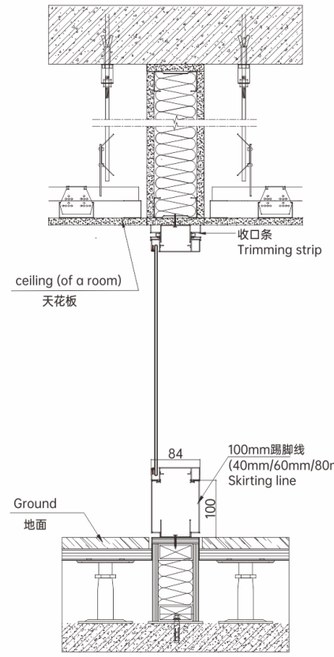

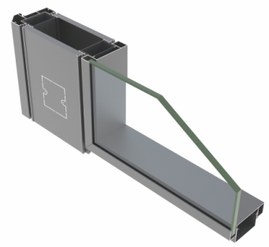

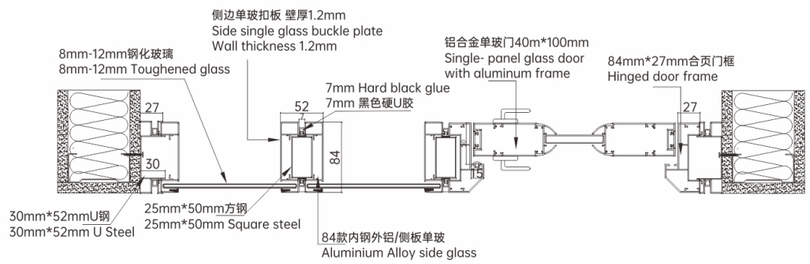

Simple lines,

beautiful space　简约线条，优美空间

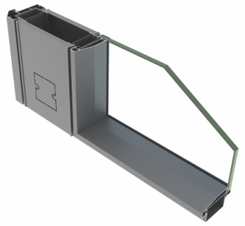

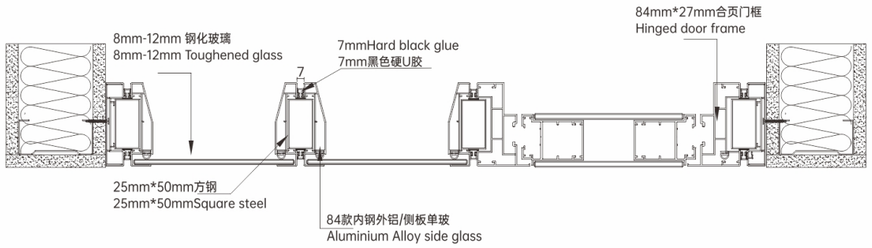

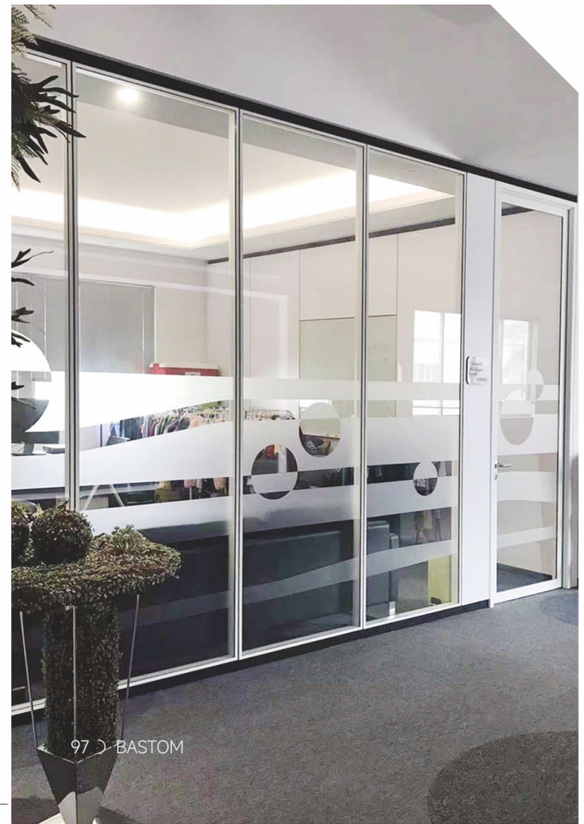

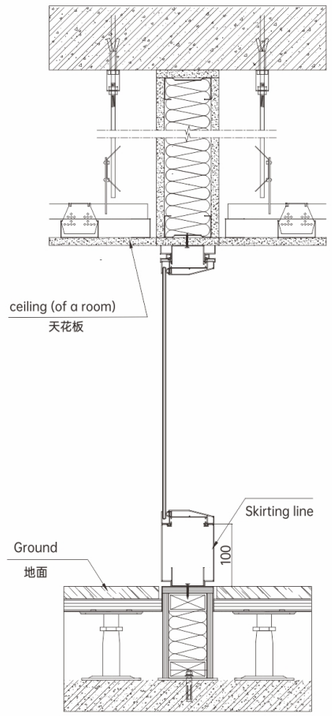

Outline
the perfect space
勾勒出完美空间

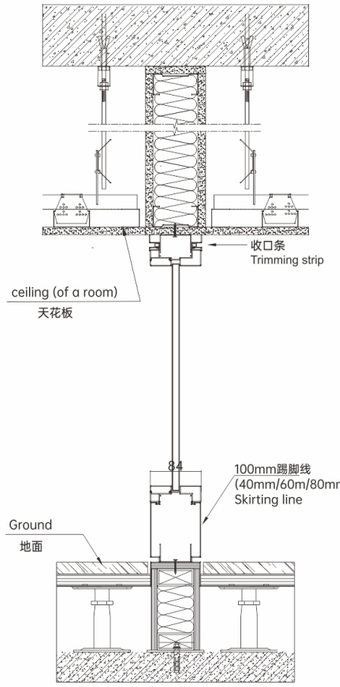

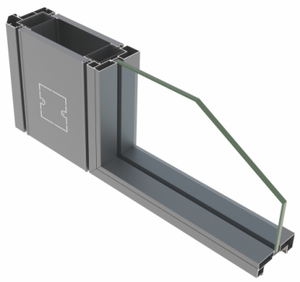

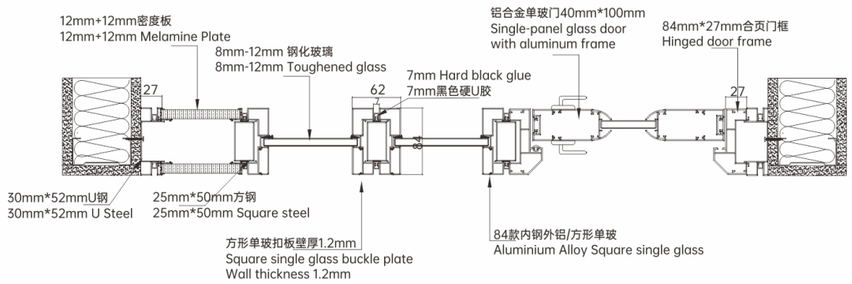

方形单玻
Square single glass
84款(84mm)

84款方形单玻
84mm square single glass

办公隔断系列 Office Partition
钢铝结构（内钢外铝45°）
Steel-Aluminum Structure (Inner Steel, Outer Aluminum ,45°)

Green building materials,

long service life

绿色环保建材，使用寿命长

办公隔断系列 **Office** Partition

钢铝结构（内钢外铝45°）>

Steel-Aluminum Structure (Inner Steel, Outer Aluminum ,45°)

84款弧形单玻

84mm curved single glass

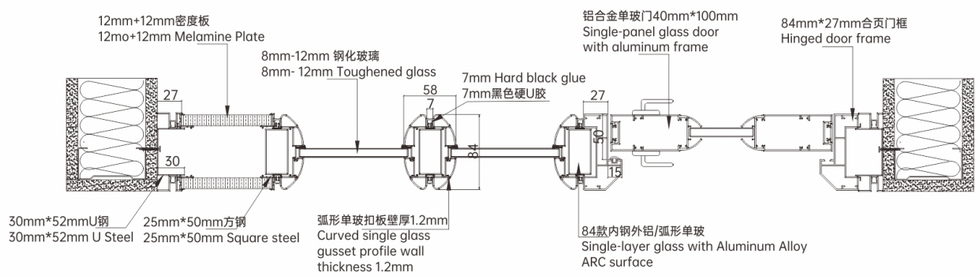

Outline
the perfect space
勾勒出完美空间

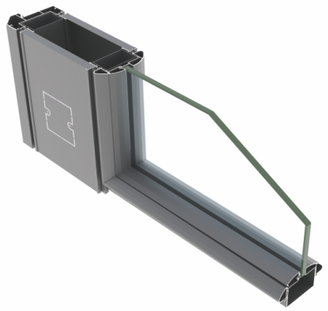

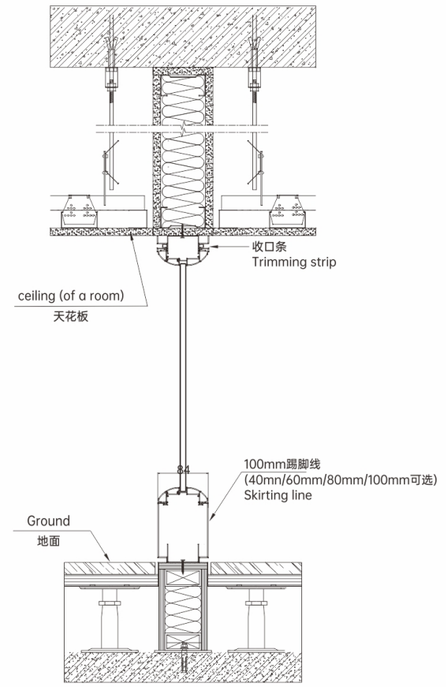

Simple lines,

beautiful space　简约线条，优美空间

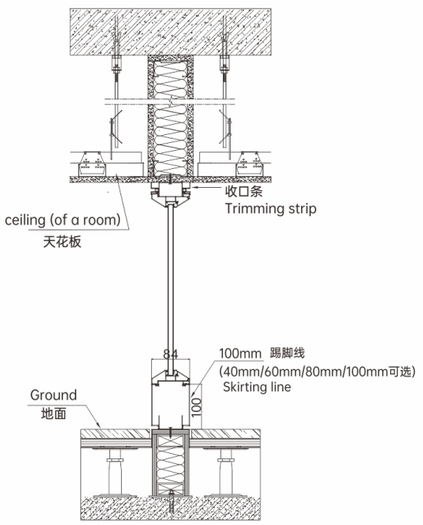

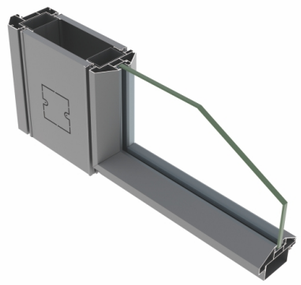

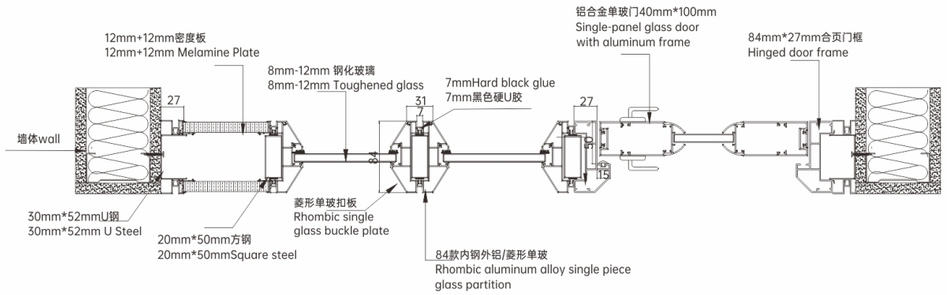

办公隔断系列 **Office** Partition

84款菱形单玻
84mm rhombic single glass

< 钢铝结构（内钢外铝45°）
Steel-Aluminum Structure (Inner Steel, Outer Aluminum ,45°)

Streamline design style,

Create creative space

流线设计风格，创造创意空间

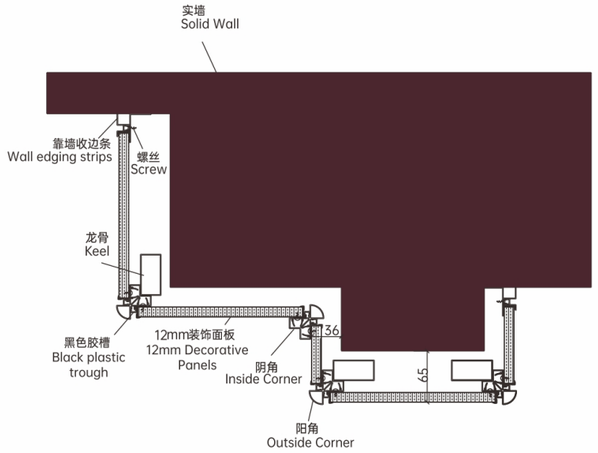

阴角包柱切面图

Inside Corner Column Cross-Section

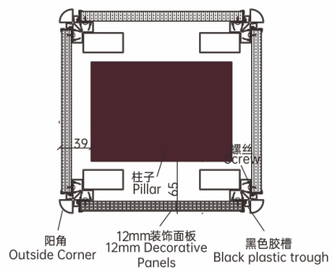

阳角包柱切面图

Outside Corner Column Cross-Section

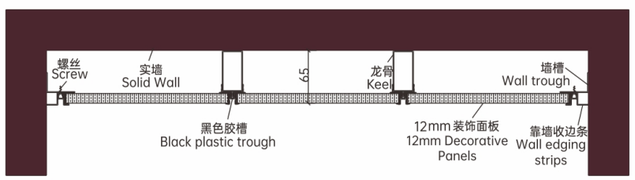

单面包墙切面图

Single Wall Cladding Cross-Section

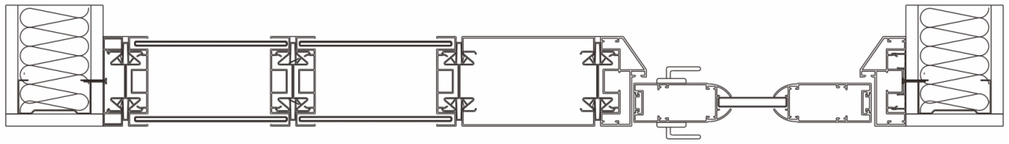

Ideal space,

Show the simplicity and rationality of modern office

理想的空间，展现现代办公室的简约与理性

办公隔断系列 **Office** Partition

钢铝结构（内钢外铝45°）>

Steel-Aluminum Structure (Inner Steel, Outer Aluminum ,45°)

92款双玻百叶

92mm double glass with louver blinds

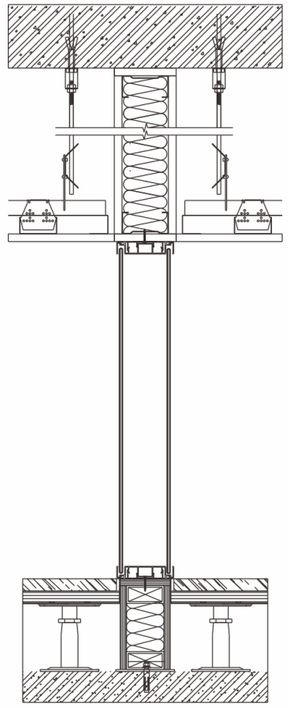

92款内钢外铝双玻组装示意图

92mm inner steel and outer aluminum double glass assembly diagram

办公隔断系列 **Office** Partition

钢铝结构（45°角或直角）>

Steel-Aluminum Structure (45° angle or right angle)

90款双玻全景
90mm panoramic double glass

Streamline design style,

Create creative space

流线设计风格，创造创意空间

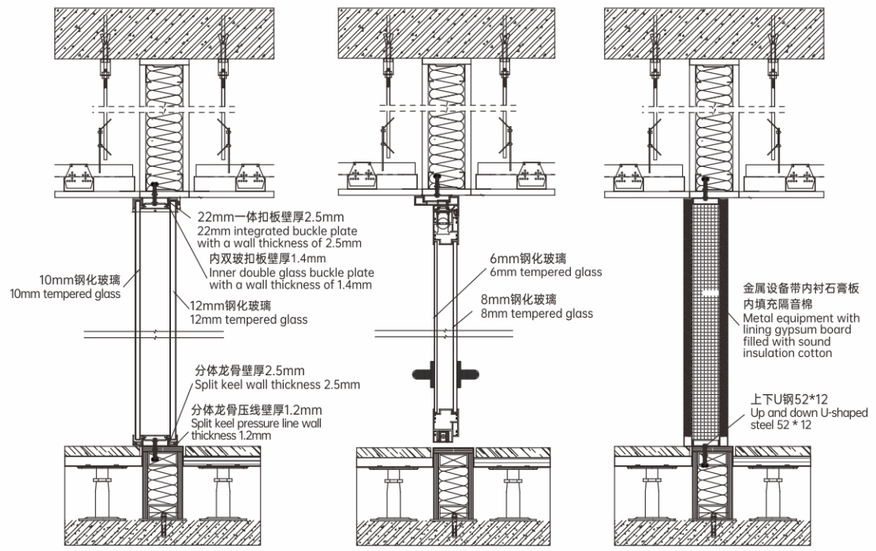

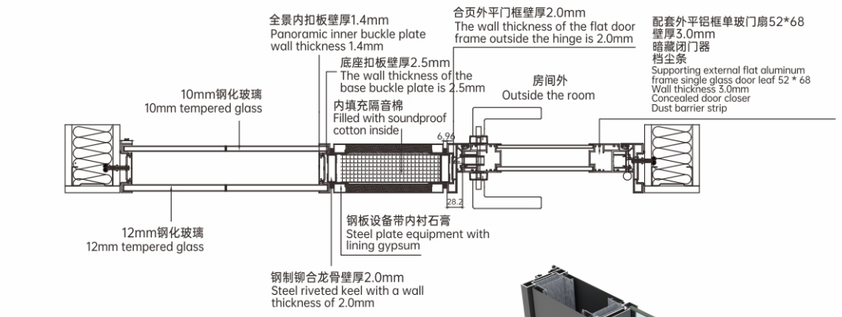

90系列23mm全景款双玻
+设备带+外平门框俯视图

90 Series 23mm Panorama Double Glazing
+ Equipment Belt + External Flush Door Frame Top View

办公隔断系列 **Office** Partition

钢铝结构（直角或斜角） >

Steel-Aluminum Structure (Right angle or oblique angle)

90款侧边全景单玻

90mm side panoramic single glass

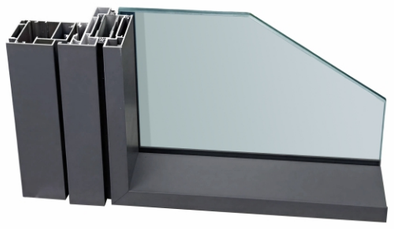

Streamline design style,

Create creative space

流线设计风格，创造创意空间

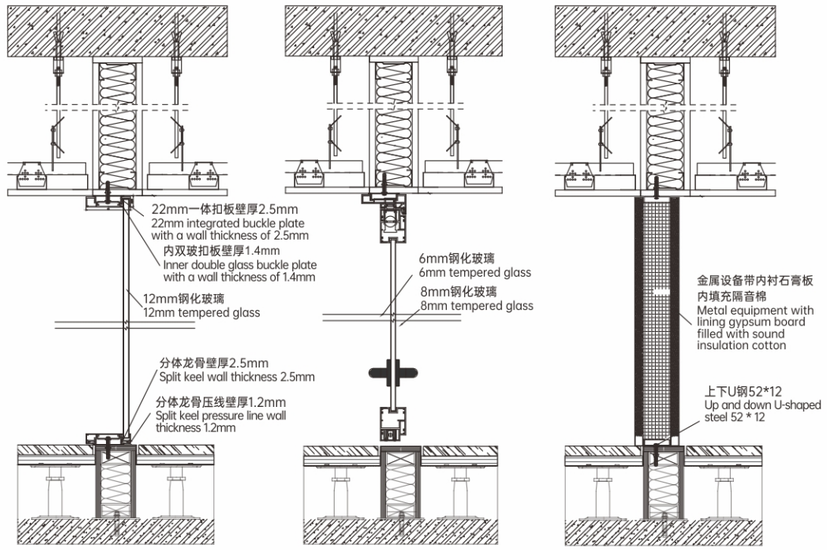

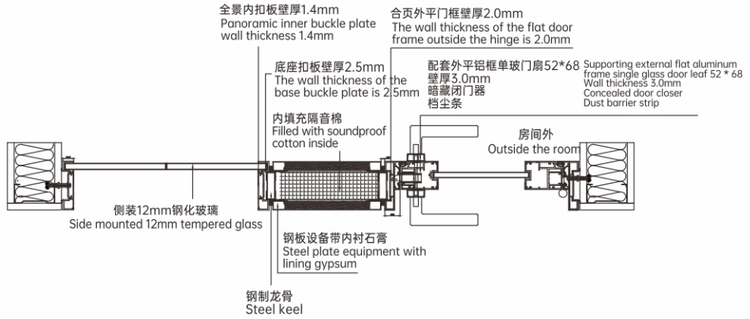

90系列23mm全景款侧边单玻+设备带+外平门框俯视图

90 Series 23mm Panoramic Side Single Glass + Equipment Belt + External Flush Door Frame Top View

办公隔断系列 **Office** Partition

全铝结构+钢板设备带

All aluminum structure+steel plate equipment belt

90款居中单玻

90mm centered single glass

Streamline design style,

Create creative space

流线设计风格，创造创意空间

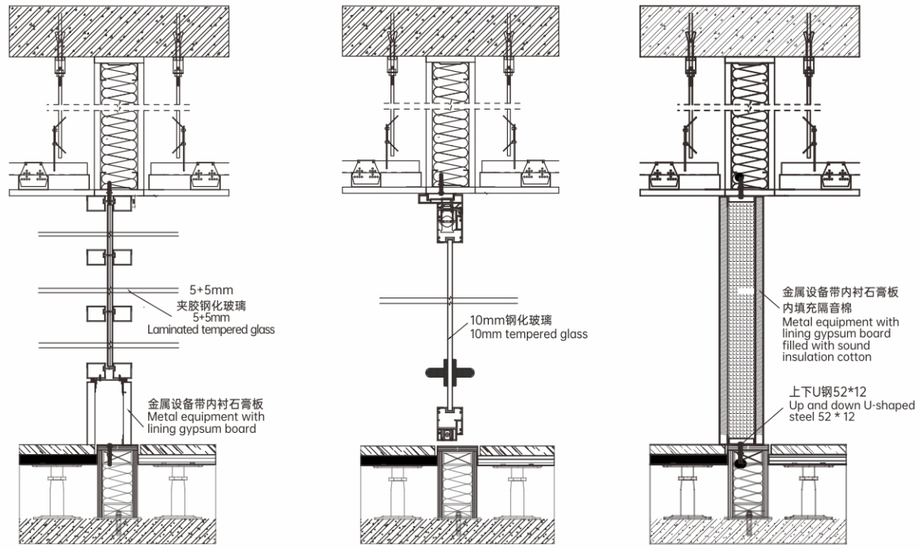

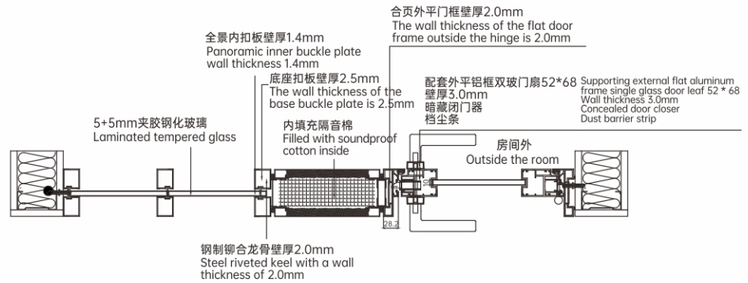

90系列单玻+设备带+外平门框俯视图

90 series single glass
+ Equipment Belt + External Flush Door Frame Top View

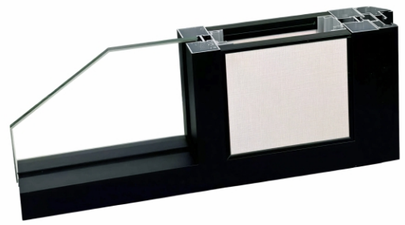

办公隔断系列 **Office** Partition

钢铝结构（切斜角或直角）>

Steel-Aluminum Structure (Cutting angle or right angle)

90款双玻
90mm double glass

Streamline design style,

Create creative space

流线设计风格，创造创意空间

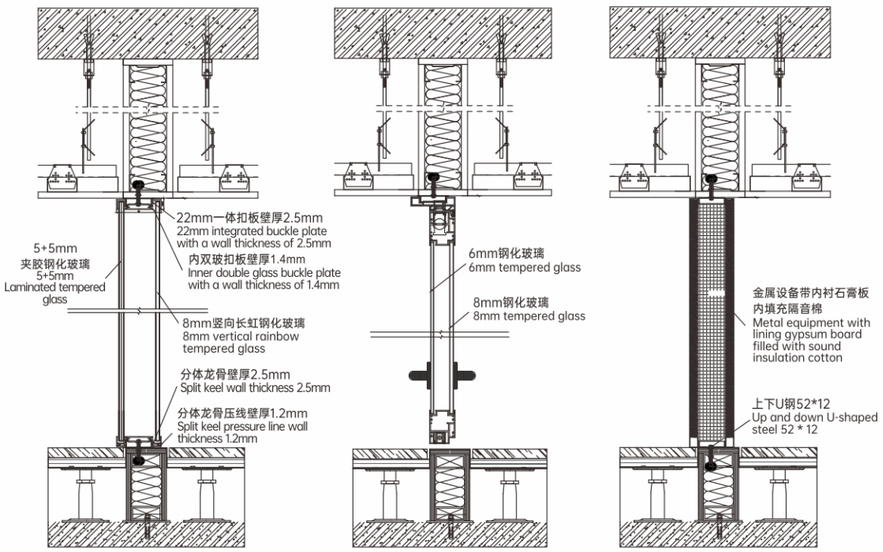

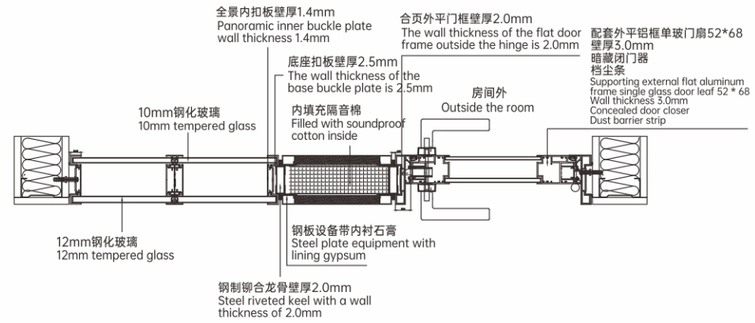

90系列23mm全景款双玻+设备带+外平门框俯视图

90 series 23mm panoramic double glass + Equipment Belt + External Flush Door Frame Top View

Elegant and unique designs
often make a difference

高雅独特的设计往往会不同凡响

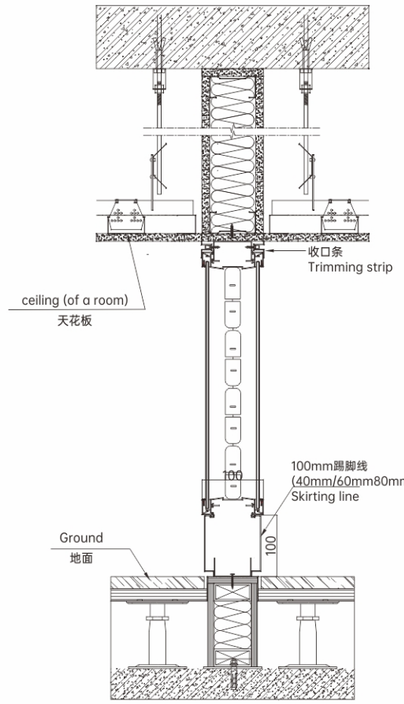

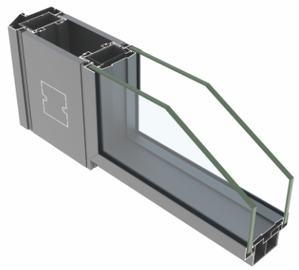

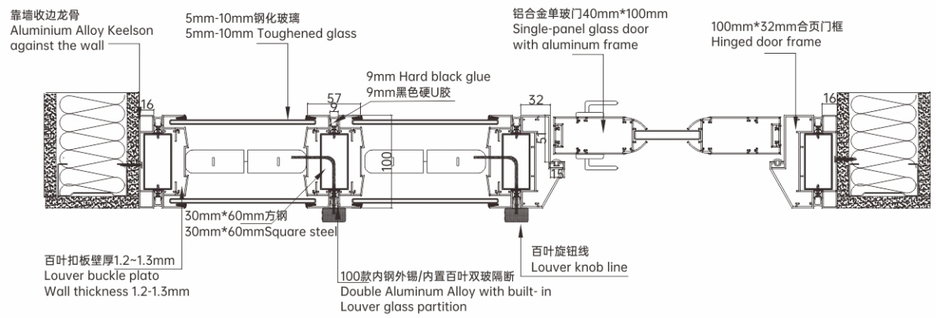

办公隔断系列 **Office** Partition

钢铝结构（内钢外铝45°）>

Steel-Aluminum Structure (Inner Steel, Outer Aluminum ,45°)

100款双玻全景

100mm panoramic double glass

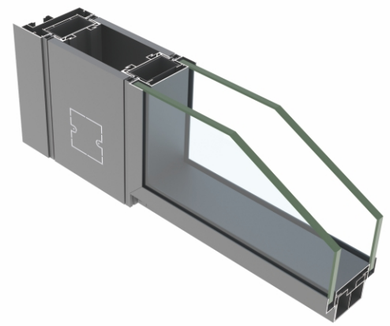

Ideal space,

Show the simplicity and rationality of modern office

理想的空间，展现现代办公室的简约与理性

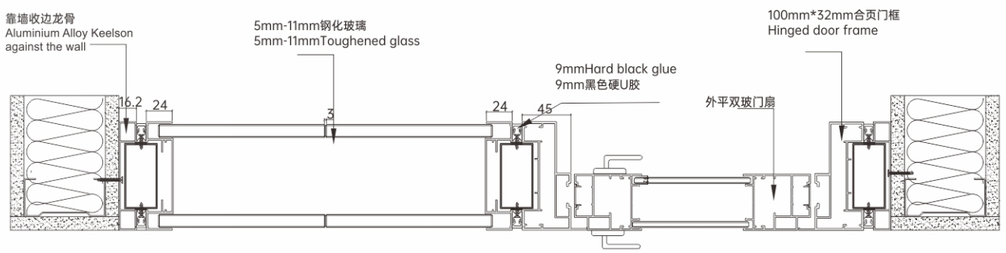

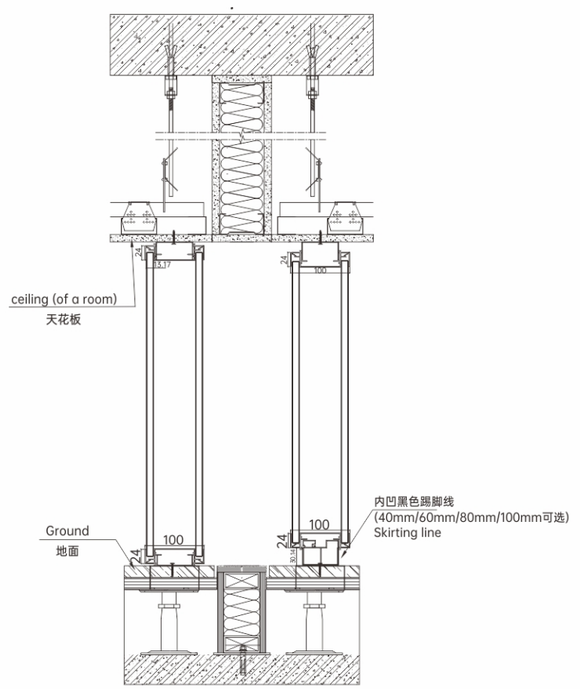

Green building materials,

long service life

绿色环保建材，使用寿命长

办公隔断系列 **Office** Partition

钢铝结构（内钢外铝45°）>

Steel-Aluminum Structure (Inner Steel, Outer Aluminum ,45°)

100款方形单玻
100mm square single glass

Elegant and unique designs
often make a difference

高雅独特的设计往往会不同凡响

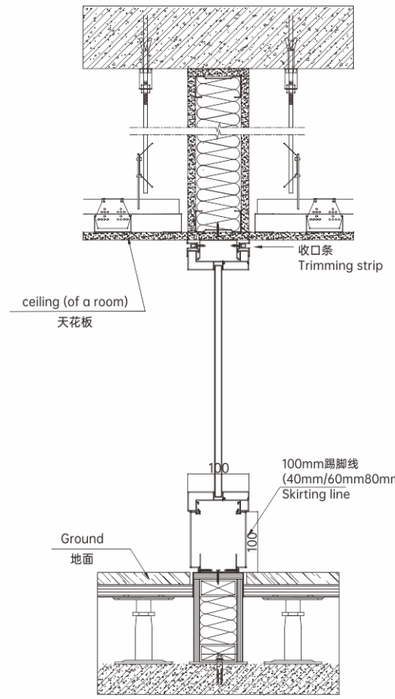

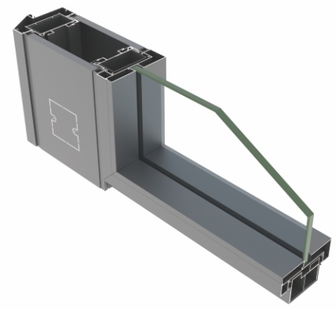

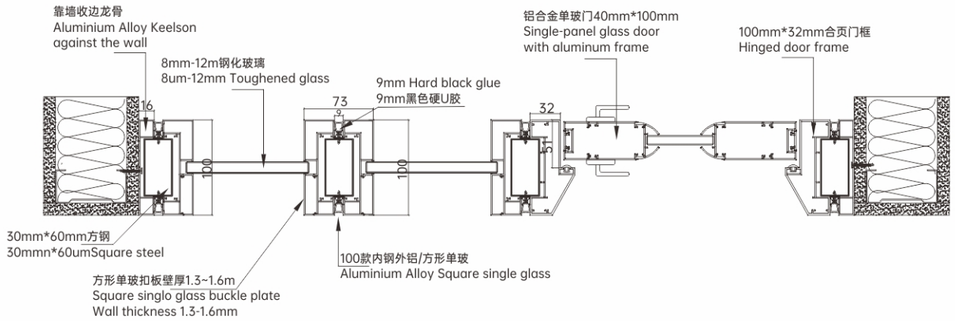

Streamline design style,

Create creative space

流线设计风格，创造创意空间

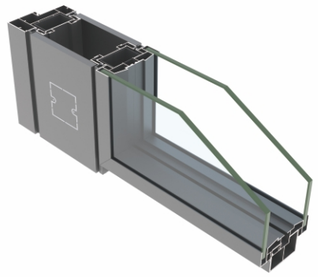

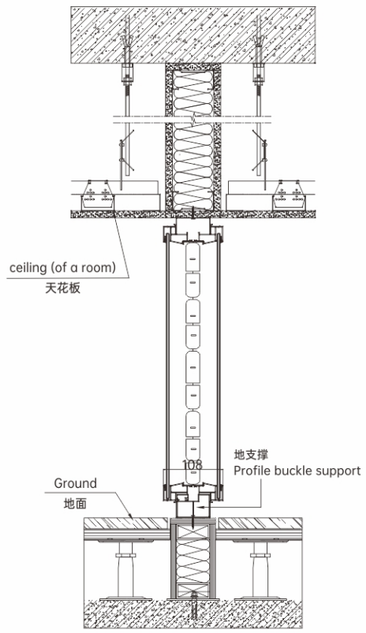

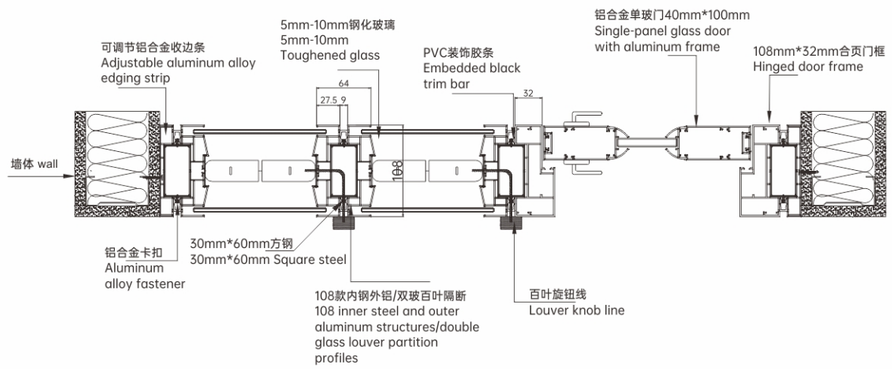

The color is soft,
Beautiful and elegant.

色泽柔和，美观高雅。

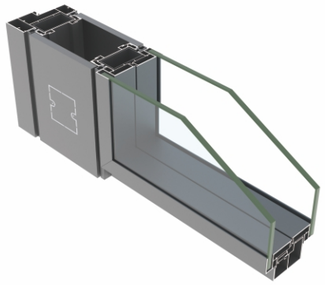

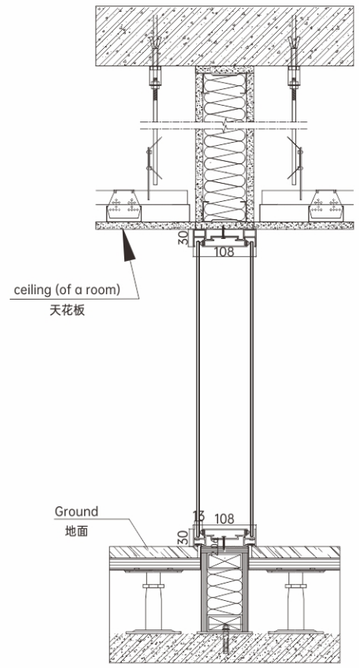

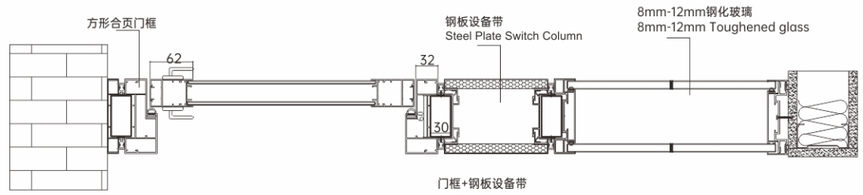

Simple lines,

beautiful space 简约线条，优美空间

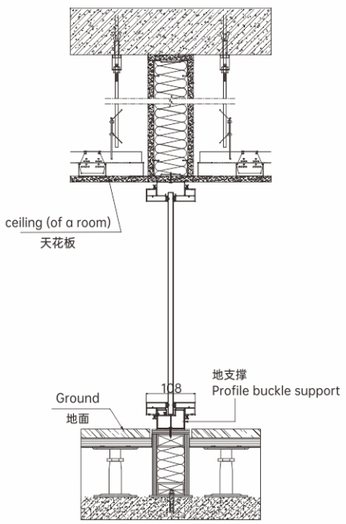

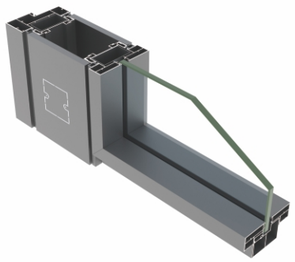

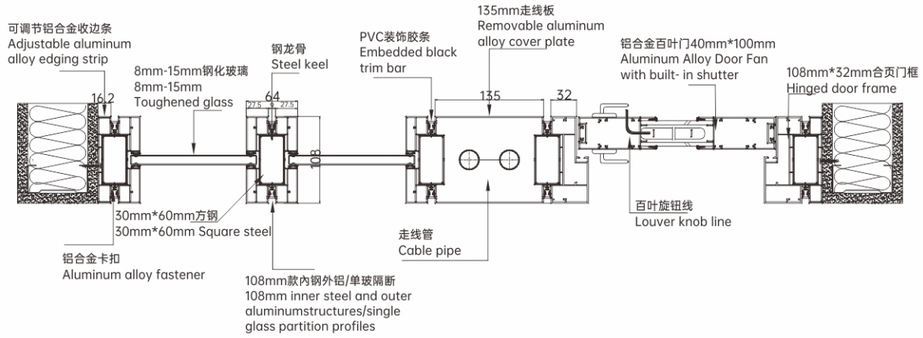

办公隔断系列 **Office** Partition

108款平面单玻
108mm flat single glass

< 钢铝结构（内钢外铝45°）
Steel-Aluminum Structure (Inner Steel, Outer Aluminum ,45°)

办公隔断系列 **Office** Partition

钢铝结构（内钢外铝45°）>

Steel-Aluminum Structure (Inner Steel, Outer Aluminum ,45°)

108款三玻
108mm triple Glass

Modern, classic
streamlined design style

现代、经典的流线设计风格

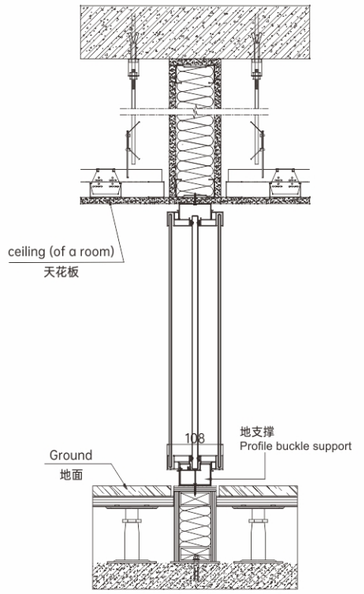

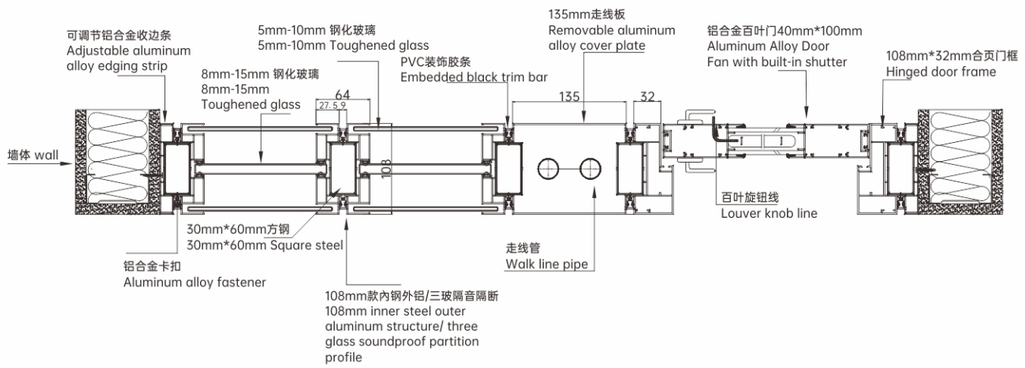

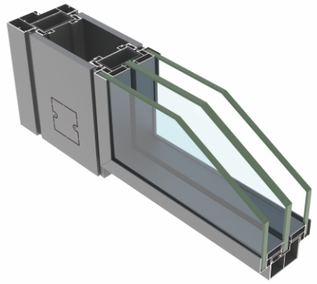

办公隔断系列 **Office** Partition

钢铝结构（内钢外铝45°）>

Steel-Aluminum Structure (Inner Steel, Outer Aluminum ,45°)

108款隐框双玻

108mm hidden frame double glass

Simple lines,

beautiful space　简约线条，优美空间

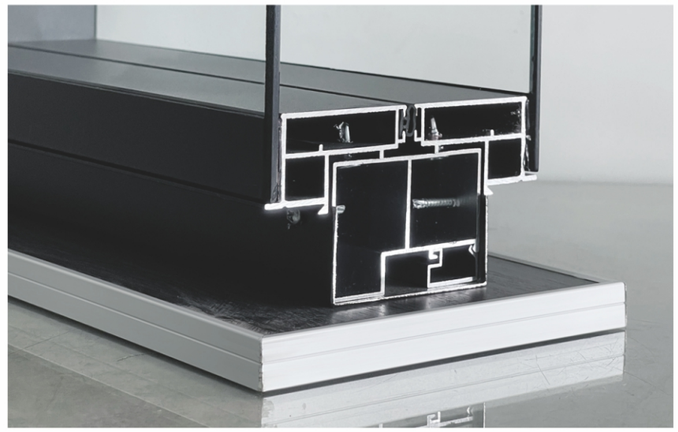

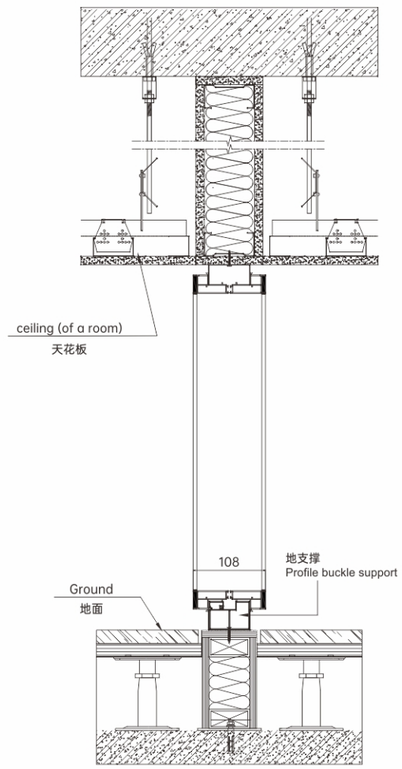

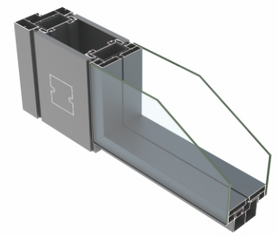

Green building materials, long service life

绿色环保建材，使用寿命长

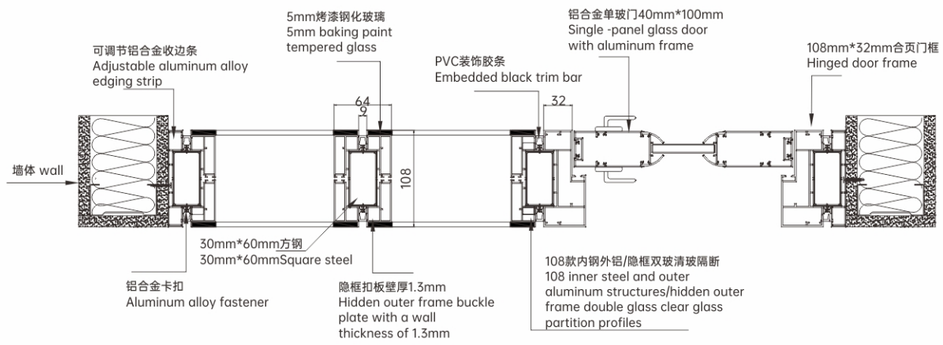

钢铝结构（内钢外铝45°）截面图 84款

84mm Steel-Aluminum Structure
(Inner Steel, Outer Aluminum 45°) Cross-Sectional Drawings

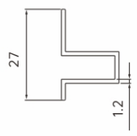

收边压条
Edge trim molding

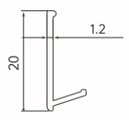

玻璃压条
Glass molding

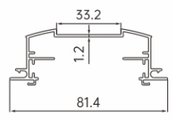

横向百叶扣板
Horizontal louver gusset plate

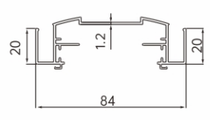

竖向百叶扣板
Vertical louver gusset plate

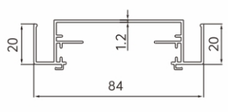

竖向平扣板
Vertical flat gusset plate

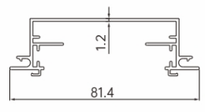

横向平扣板
Horizontal flat gusset plate

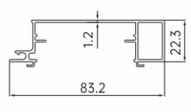

横体侧边扣板
Horizontal side gusset plate

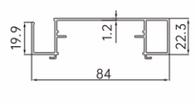

竖向侧边单玻扣板
Vertical side single glass gusset plate

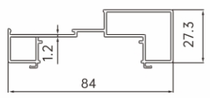

方形单玻扣板
Square single glass gusset plate

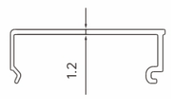

方形单玻压条
Square single glass molding

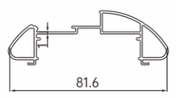

弧形单玻扣板
Curved single glass gusset plate

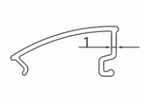

弧形单玻压条
Curved single glass molding

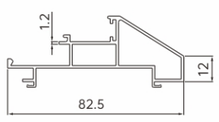

菱形单玻扣板
Rhombic single glass gusset plate

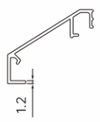

菱形单玻压条
Rhombic single glass molding

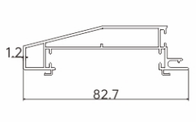

斜面侧边单玻分体框
Chamfered side single glass split frame

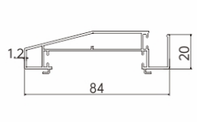

斜面侧边单玻一体框
Chamfered side single glass integrated frame

100mm踢脚线
100mm skirting

80mm踢脚线
80mm skirting

60mm踢脚线
60mm skirting

40mm踢脚线
40mm skirting

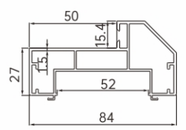

菱形门框
Rhombic door frame

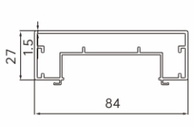

地弹簧门框
Floor spring door frame

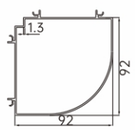

转角柱
Corner column

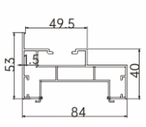

外齐平门框
External flush door frame

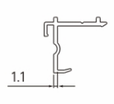

12mm板材封边
12mm panel edge banding

135mm走线槽
135mm cable duct

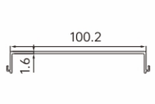

100mm走线槽
100mm cable duct

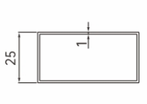

25*50镀锌扁管
25*50mm galvanized flat pipe

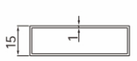

15*50镀锌扁管
15*50mm galvanized flat pipe

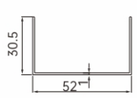

30*52天地U钢(黑)
30*52mm U-shaped steel (black)

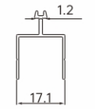

窄框板墙龙骨
Narrow frame wall cladding keel

转接一字龙骨
Transfer straight keel

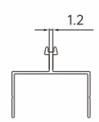

板墙龙骨
Wall cladding keel

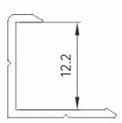

木板收边条
Wood panel trim

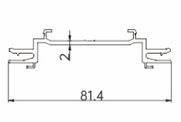

全景双玻分体框
Panoramic double glass split frame

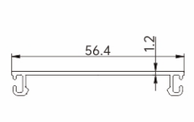

全景双玻内扣板
Panoramic double glass inner gusset plate

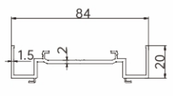

全景一体玻璃框
Panoramic integrated glass frame

钢铝结构（内钢外铝45°）截面图 92款

92mm Steel-Aluminum Structure
(Inner Steel, Outer Aluminum 45°) Cross-Sectional Drawings

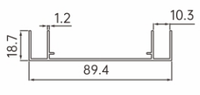

收边底座
Edge trim base

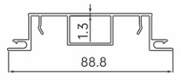

分体扣板
Split gusset plate

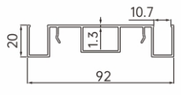

一体扣板
Integrated gusset plate

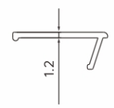

玻璃压线
Glass molding

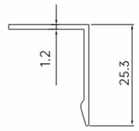

收边压线
Edge trim molding

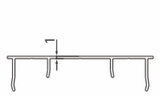

收边底座
Edge trim base

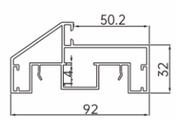

菱形门框
Rhombic door frame

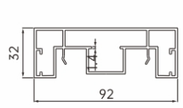

地弹簧门框
Floor spring door frame

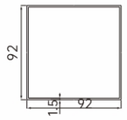

90*90方管
90*90 square tube

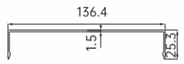

135mm走线槽
135mm cable duct

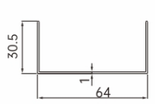

30*64天地U钢(黑)
30*64 U-shaped steel (black)

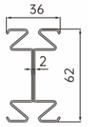

钢制滚压成型龙骨
Roll-formed steel keel

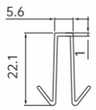

铝合金穿条
Aluminum alloy through strip

钢铝结构（内钢外铝45°）截面图 100款

100mm Steel-Aluminum Structure
(Inner Steel, Outer Aluminum 45°) Cross-Sectional Drawings

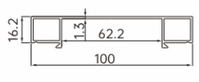

收边扣板
Edge trim gusset plate

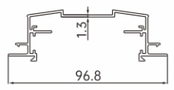

横向百叶扣板
Horizontal louver gusset plate

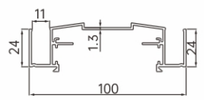

竖向百叶扣板
Vertical louver gusset plate

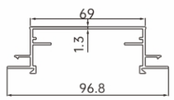

横向平扣板
Horizontal flat gusset plate

钢铝结构（内钢外铝45°）截面图 100款

100mm Steel-Aluminum Structure
(Inner Steel, Outer Aluminum 45°) Cross-Sectional Drawings

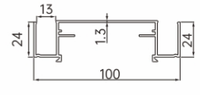

竖向平扣板
Vertical flat gusset plate

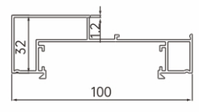

方形单玻扣板
Square single glass gusset plate

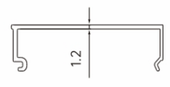

方形单玻压条
Square single glass molding

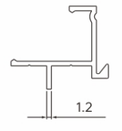

12mm板材封边
12mm panel edge banding

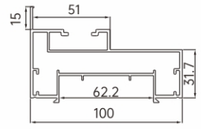

外齐平门框
External flush door frame

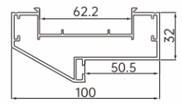

菱形门框
Rhombic door frame

100mm踢脚线
100mm skirting

80mm踢脚线
80mm skirting

60mm踢脚线
60mm skirting

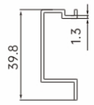

40mm踢脚线
40mm skirting

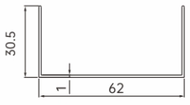

30*62天地U钢(黑)
30*62mm U-shaped steel (black)

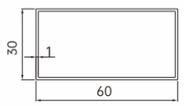

30*60镀锌扁管
30*60mm galvanized flat pipe

铝合金装饰线（黑）
Aluminum alloy decorative trim (black)

铝合金卡条
Aluminum alloy clip strips

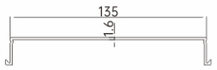

135走线槽
135mm cable duct

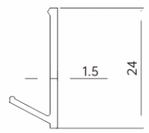

玻璃压线
Glass molding

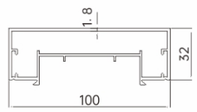

地弹簧门框
Floor spring door frame

钢铝结构（内钢外铝45°）截面图 108款

108mm Steel-Aluminum Structure
(Inner Steel, Outer Aluminum 45°) Cross-Sectional Drawings

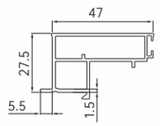

隐框
Concealed frame

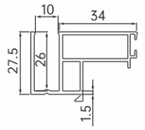

三玻框
Triple-glass frame

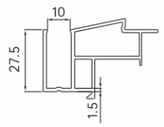

百叶框
Louver frame

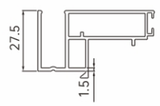

平面双玻框
Flat double glass frame

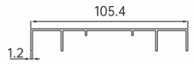

收边扣板
Edge trim gusset plate

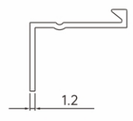

收边压条
Edge trim molding

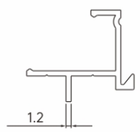

12mm板材封边
12mm sheet metal edge banding

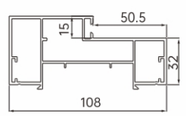

平开门框
Hinged door frame

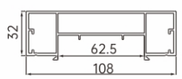

地弹簧门框
Floor spring door frame

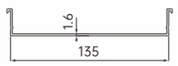

135mm柱子盖板
135mm column capping

100mm踢脚线
100mm skirting

80mm踢脚线
80mm skirting

60mm踢脚线
60mm skirting

40mm踢脚线
40mm skirting

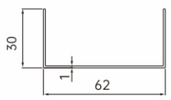

30*62天地U钢(黑)
30*62mm U-shaped steel (black)

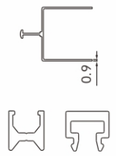

铝合金卡条/铝合金装饰线（黑）
Aluminum alloy clip/decorative trim (black)

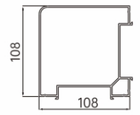

转角柱
Corner columns

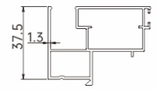

37平面双玻框
37mm flat double glass frame

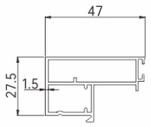

平面单玻框
Flat single glass frame

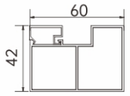

下支撑
Lower support

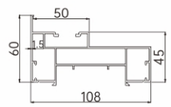

外齐平门框
External flush door frame

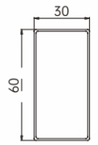

30*60方钢
30x60 square steel

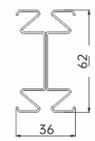

36*62滚压钢骨
36x62 rolled steel frame

钢板转换龙骨
Steel plate conversion keel

钢板背后L铝卡
L-shaped aluminum clip behind steel plate

Office Partition

办公隔断篇

> 全钢防火结构

Full-Steel Fire-Rated Structure

Bastom 佰斯通

Full-steel Fire-Rated Structure 全钢防火结构

40款(40mm)、105款(105mm)、108款(108mm)、113款(113mm)、123款(123mm)

The color is soft,
Beautiful and elegant.

色泽柔和，美观高雅。

办公隔断系列 **Office** Partition

全钢防火结构 >

Full-Steel Fire-Rated Structure

40款单面钢板挂墙

40mm Single-sided steel plate wall hanging

单面钢板（非密拼）接点图

Single-sided steel plate (non-close-fitting) joint diagram

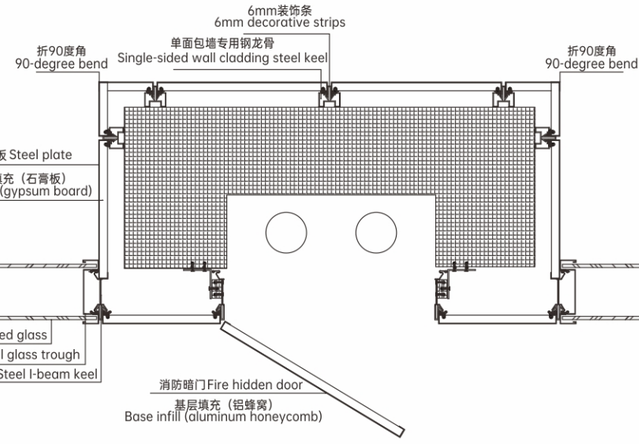

单面钢板（密拼）接点图

Single-sided steel plate (close-jointed) joint diagram

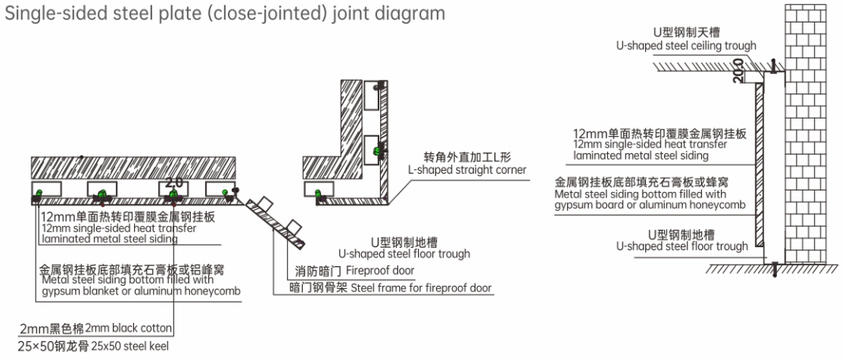

Simple lines,

beautiful space　简约线条，优美空间

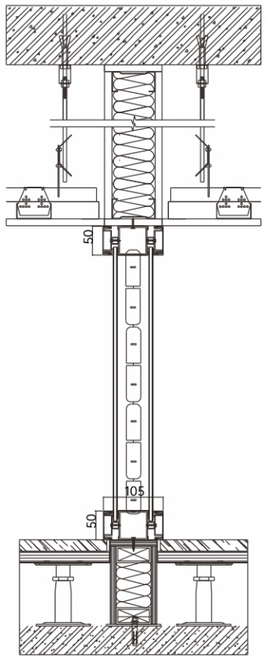

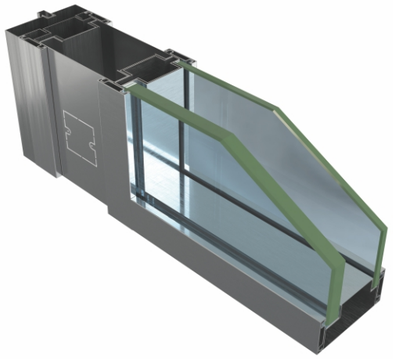

105款全钢双玻百叶组装示意图
105mm Full-steel double glass with louver blinds assembly diagram

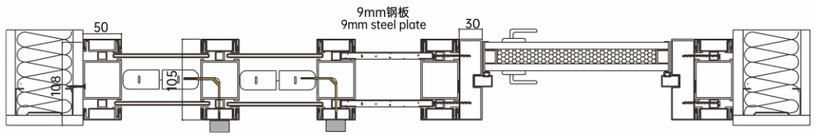

105款防火双玻
105mm fire-rated double glass

办公隔断系列 Office Partition
< 全钢防火结构
Full-Steel Fire-Rated Structure

办公隔断系列 **Office** Partition

全钢防火结构 >
Full-Steel Fire-Rated Structure

108款防火双玻
108mm fire-rated double glass

Modern, classic
streamlined design style

现代、经典的流线设计风格

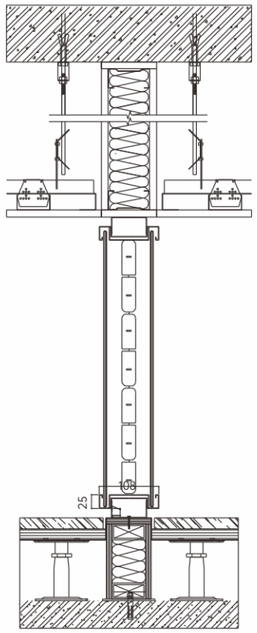

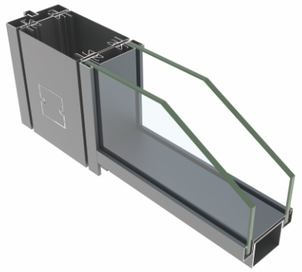

108款全钢双玻百叶组装示意图
108mm Full-steel double glass with louver blinds assembly diagram

The color is soft,
Beautiful and elegant.

色泽柔和，美观高雅。

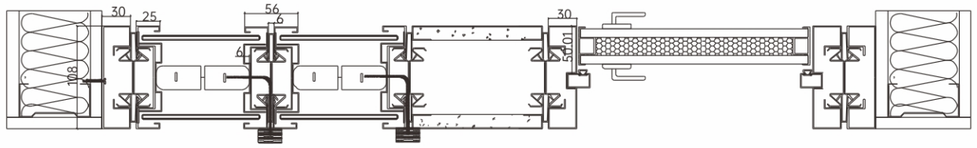

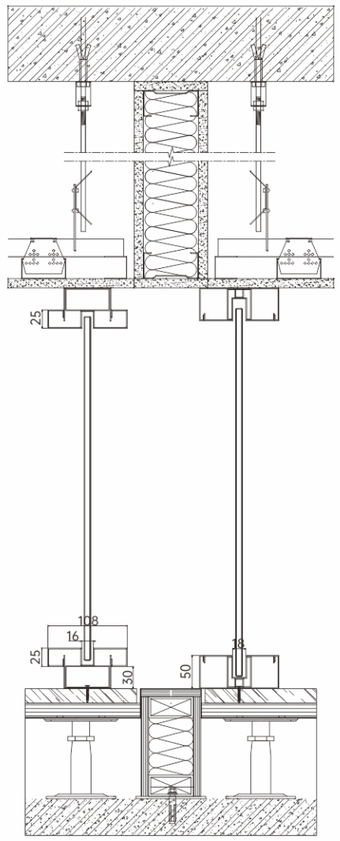

108款防火单玻
108mm fire-rated single glass

Streamline design style,

Create creative space

流线设计风格，创造创意空间

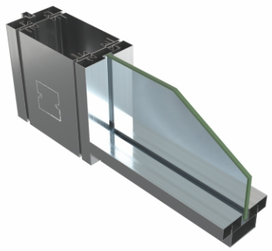

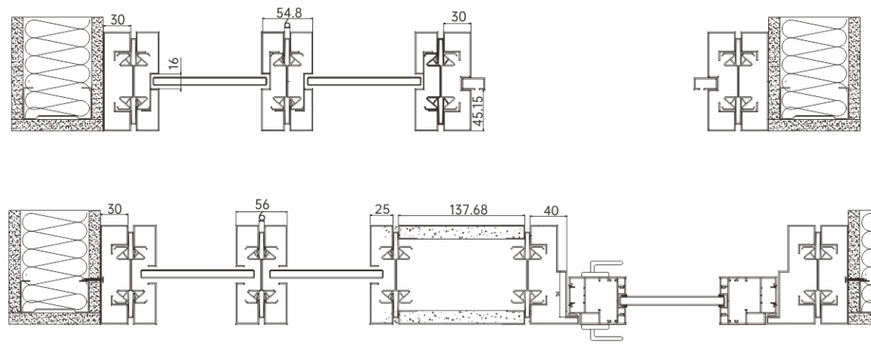

Simple lines,

beautiful space　简约线条，优美空间

The color is soft,
Beautiful and elegant.

色泽柔和，美观高雅。

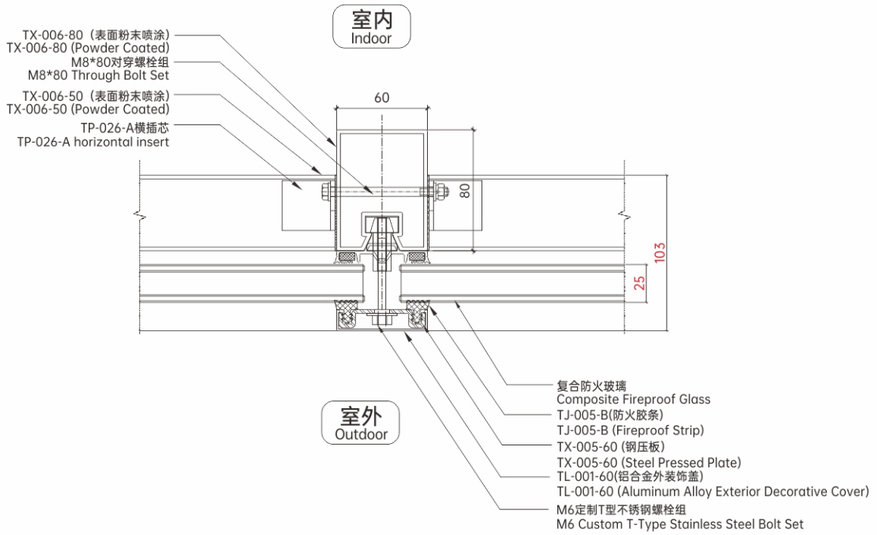

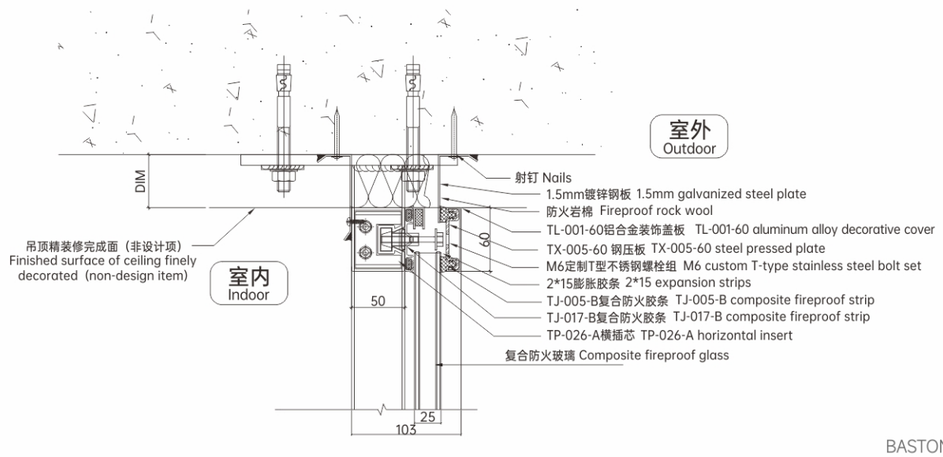

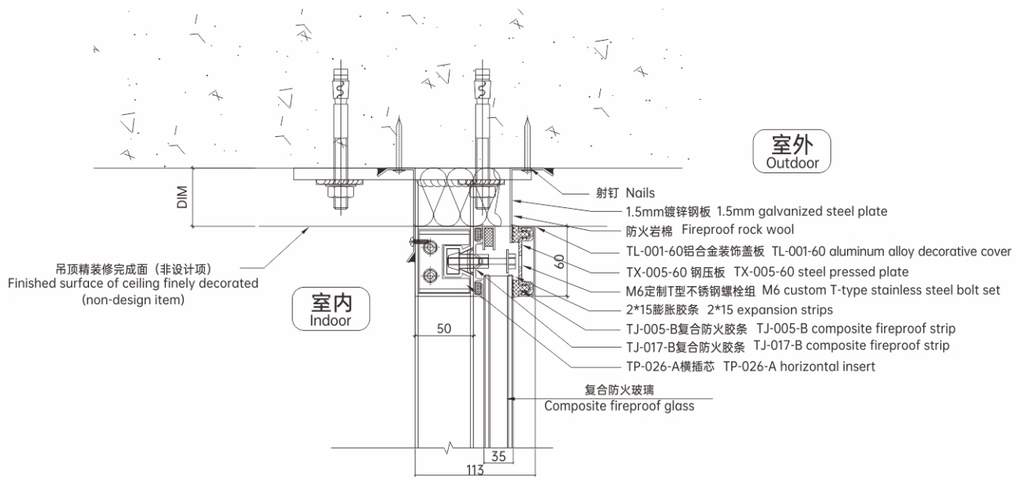

Streamline design style,

Create creative space

流线设计风格，创造创意空间

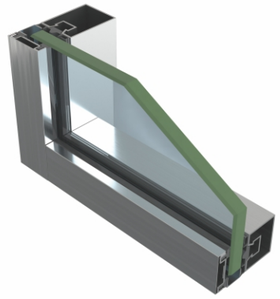

办公隔断系列 **Office** Partition

全钢防火结构 >

Full-Steel Fire-Rated Structure

A类113款隔热型防火玻璃隔断

（已通过90分钟型式检验）

Class A 113mm thermal insulation fire-rated glass partition
(Passed 90-minute type test)

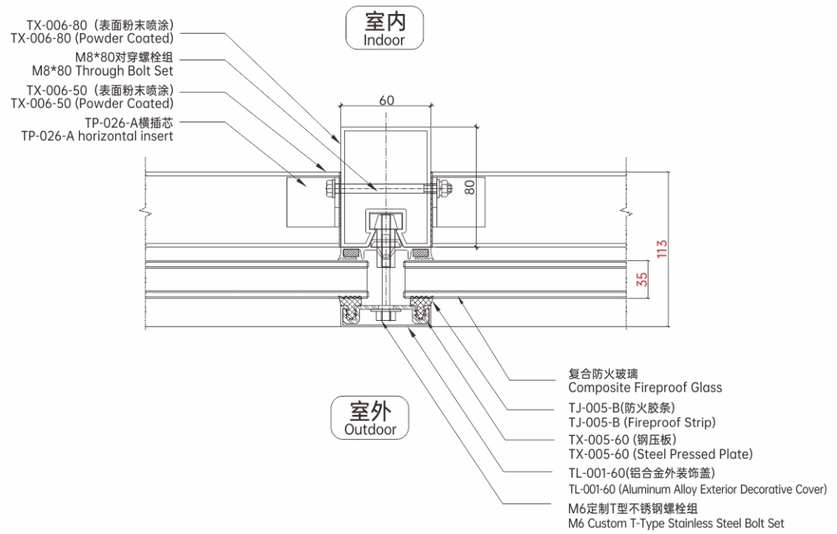

Simple lines,

beautiful space　简约线条，优美空间

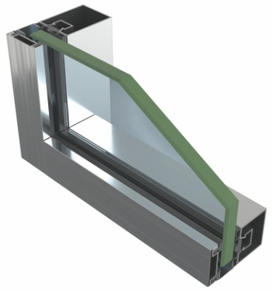

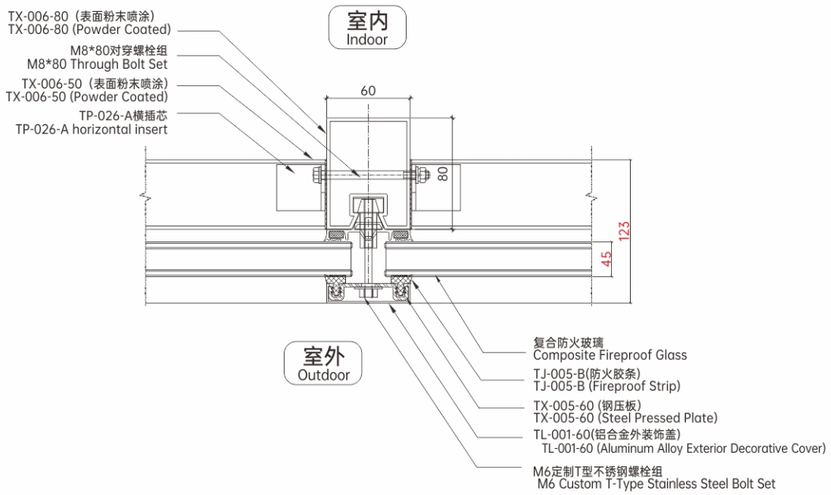

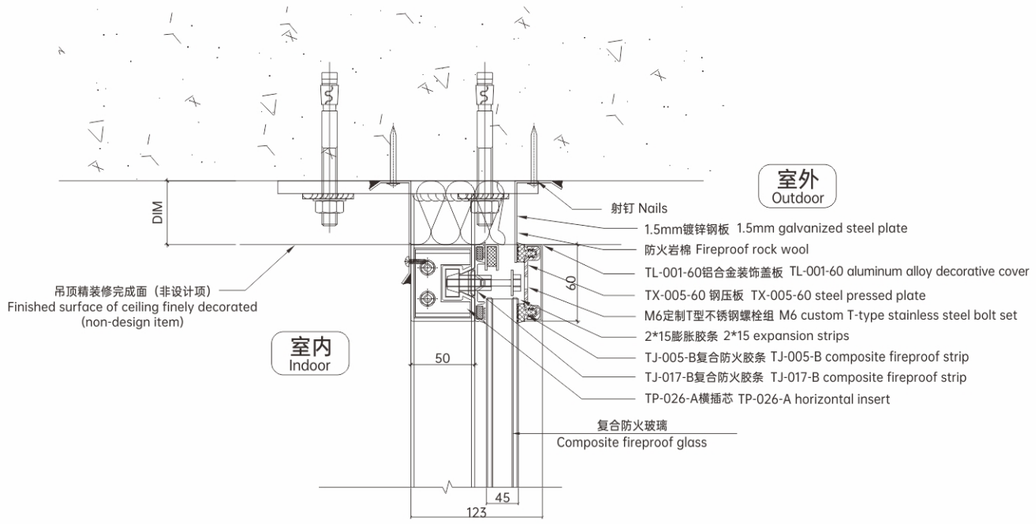

Simple lines,

beautiful space　简约线条，优美空间

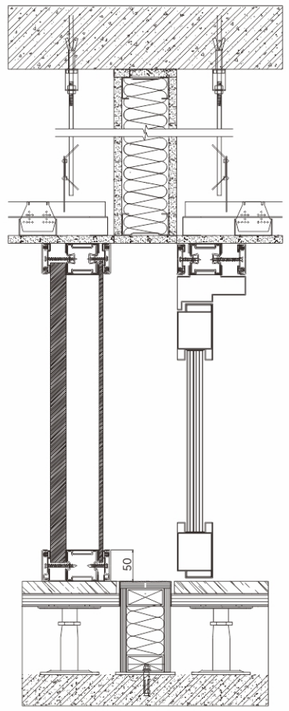

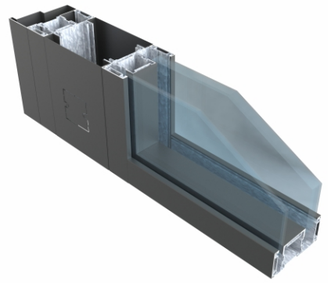

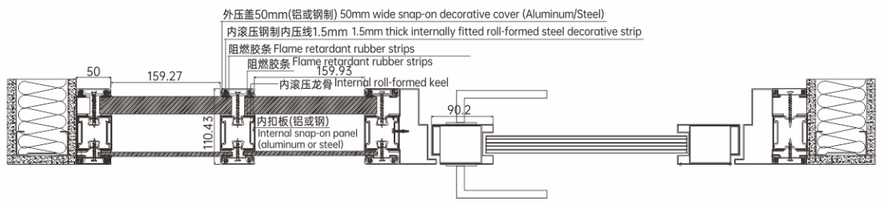

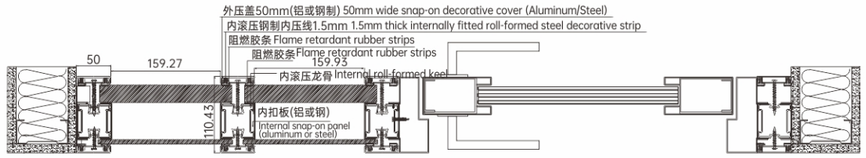

方管式全钢A1.0隔热型
双玻防火玻璃隔断
Square Tube Structural Full-Steel Framed,
Double-Glazed 60-Minute Fire-Rated Insulated Glass Partition

办公隔断系列 **Office** Partition
< 全钢防火结构
Full-Steel Fire-Rated Structure

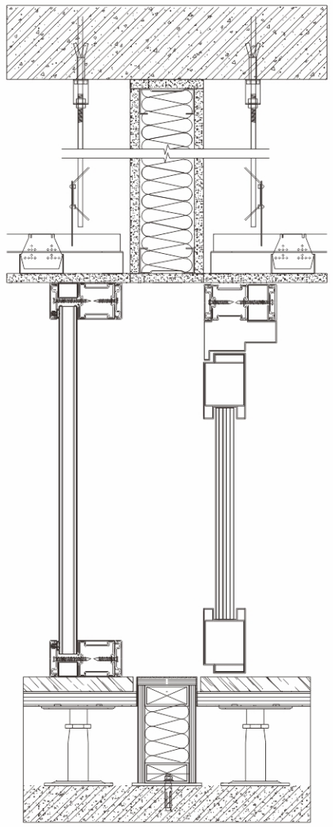

Streamline design style,

Create creative space

流线设计风格，创造创意空间

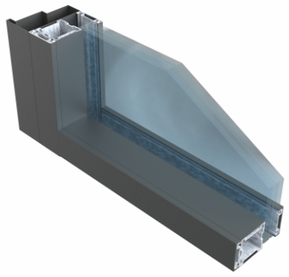

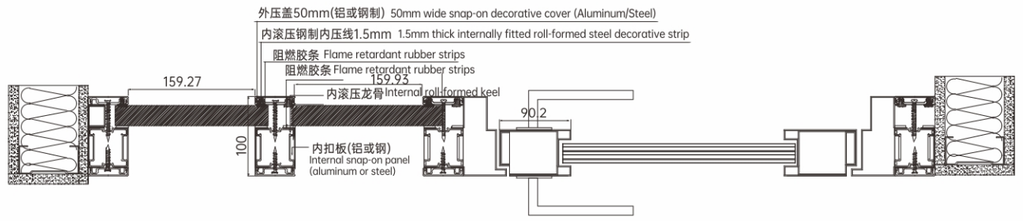

Sectional structure diagram 剖面结构图

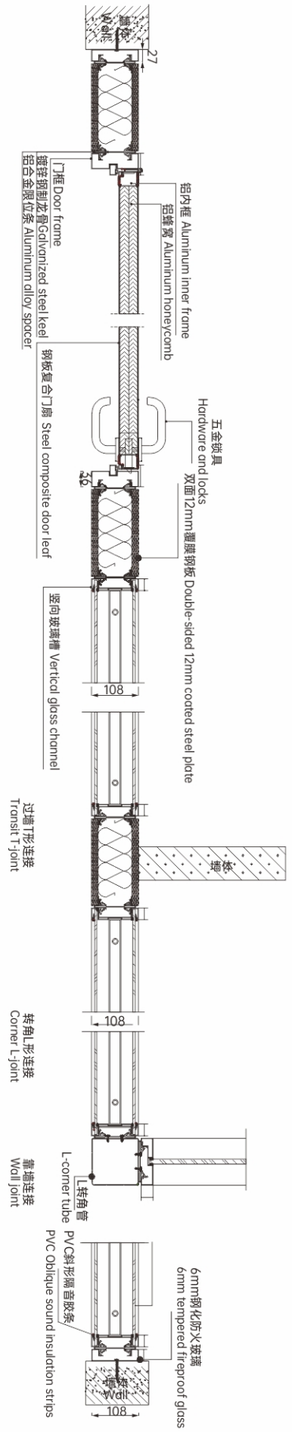

Sectional structure diagram 剖面结构图

108款全钢双玻玻璃框剖面图
108mm full-steel double-glass glass frame cross-section

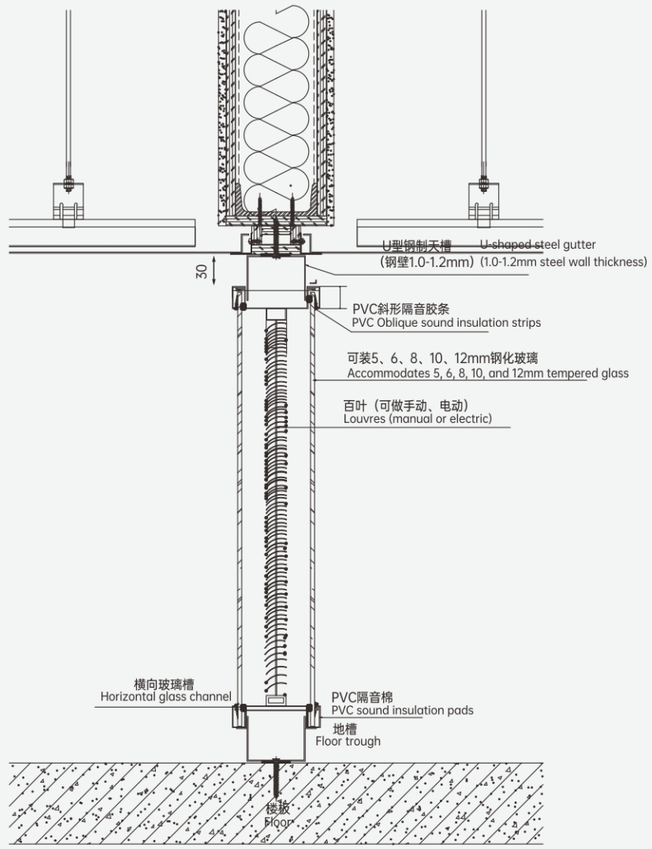

Sectional structure
diagram
剖面结构图

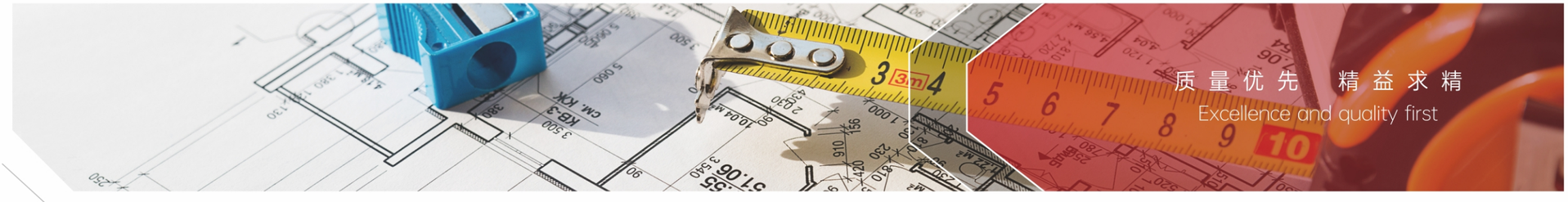

108款覆膜钢质挂板剖面图
108mm film-coated steel cladding cross-section

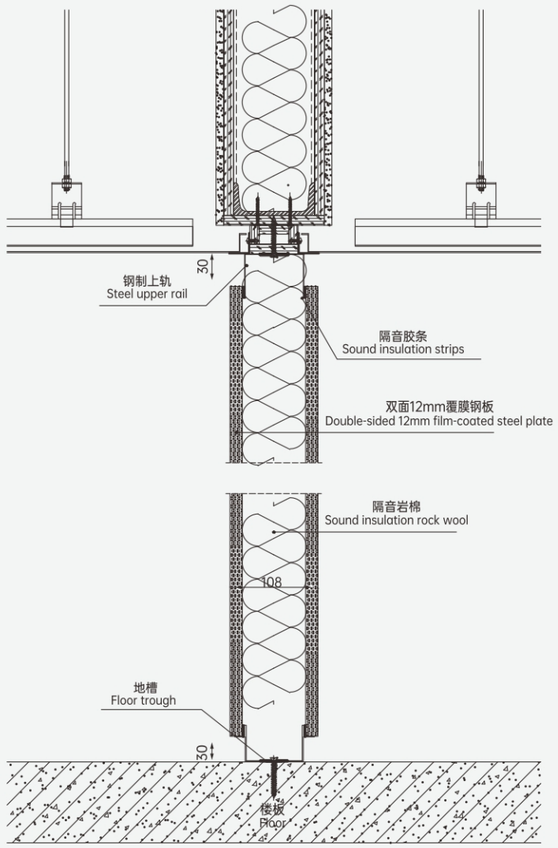

108款钢质复合门扇剖面图
108mm Steel composite door leaf cross-section

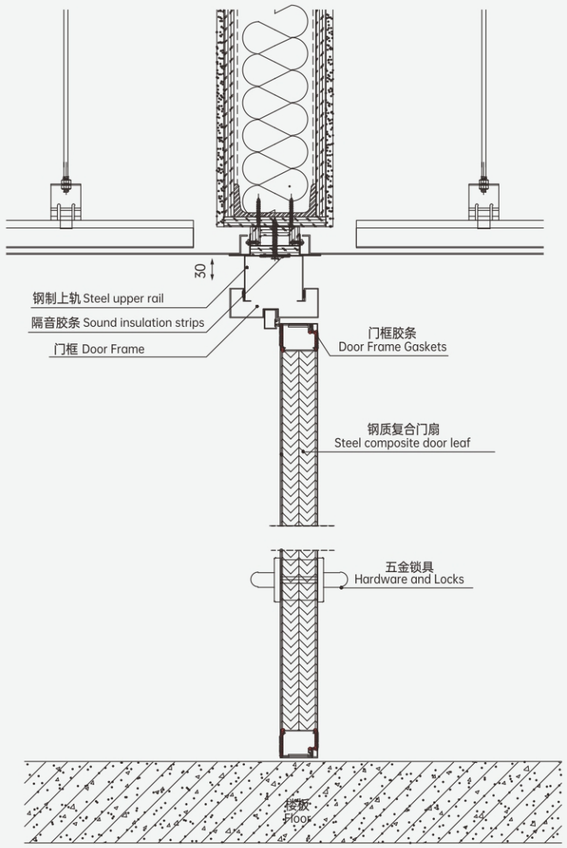

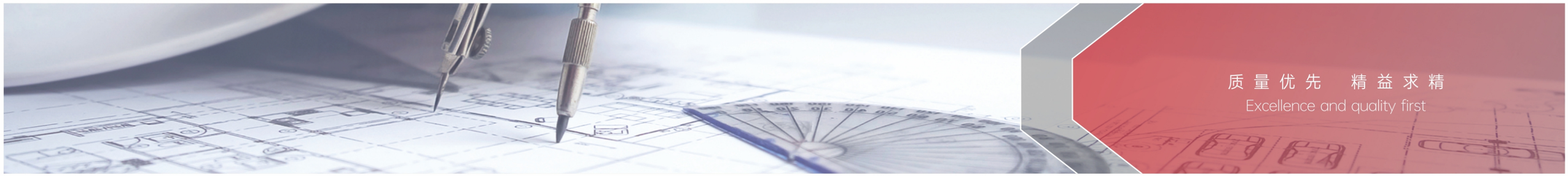

Full-steel Fire-Rated Partition Design Description
全钢防火隔断设计说明

产品款式技术概况 Product Style and Technical Overview

系统特点 System Features

1.全钢防火玻璃隔断具有整体超高的稳定性，强度和耐火隔音效果，设计严谨、品质保障、工艺精湛、技术先进；
2.更好地满足客户美学和功能方面的极致要求，带来高端办公体验的新标准；
3.钢制型材无障碍防火品质；
4.使用牢固密封的钢制框架和防热。

1.Full-steel fireproof glass partitions offer exceptional overall stability, strength, and fire and sound insulation, featuring rigorous design, quality assurance, exquisite craftsmanship, and advanced technology.
2.They meet customers' ultimate aesthetic and functional requirements, setting a new standard for a high-end office experience.
3. Steel profiles offer barrier-free fireproof performance.
4. Utilizes a secure, sealed steel frame and heat-resistant finish.

技术参数 Technical Parameters

1.墙体完成面厚度：门樘+设备带位置厚度108mm；双玻防火隔断框拼框位置27mm+6mm+27mm；
2.玻璃：厚度为6mm防火玻璃；
3.设备带用壁厚0.8镀锌钢板折弯成型背衬12mm石膏板、钢板表面静电喷涂处理；
4.所有玻璃之间使用牢固密封的钢制框架；
5.与双层隔断防火系统及智能化系统功能完美结合；
6.隔断所有外露型材均经过粉末喷涂，以保证其高品质的外观和长久的使用功能。

1. Finished Wall Thickness: Door frame + equipment strip thickness 108mm; Double-glass fireproof partition frame thickness 27mm + 6mm + 27mm.
2. Glass: 6mm thick fireproof glass.
3. Equipment strips are formed from 0.8mm thick galvanized steel sheets, with 12mm gypsum board and steel surfaces electrostatically sprayed.
4. All glass panels are securely sealed with a steel frame.
5. Perfectly integrated with the double-layer partition fire protection system and intelligent system functionality.
6. All exposed partition profiles are powder-coated to ensure a high-quality appearance and long-term functionality.

性能参数 Performance Parameters

1.防火检测证书2020201961、2020210346、L20-WT1712、L19-WT0221、L19-WT0220；
2.防火测试达到90分钟以上；
3.卓越的搞冲击性能，安全耐用，防撞牢固；

1. Fire Protection Test Certificates 2020201961, 2020210346, L20-WT1712, L19-WT0221, L19-WT0220.
2. Fire resistance tested for over 90 minutes
3. Excellent impact resistance, safe, durable, and robust.

Full-steel Fire-Rated partition processing
and installation technical specifications
全钢防火隔断加工工艺及安装技术规范

产品基础工艺及安装技术规范 Basic product processing and installation technical specifications

材质及工艺 Materials and Craftsmanship

1.产品内主龙骨采用1.0mm厚镀锌钢滚压一体成型结构，双层铆合工艺；
2.产品主体玻璃框架及外装饰面材料均使用1.2mm厚度及以上镀锌钢、不锈钢、304不锈钢材质，加工工艺为刨槽折 弯及滚压一体成型组合工艺；
3.产品表面加工工艺可选静电喷涂、聚酯漆喷涂、氟碳喷涂及PVC覆膜；

1.The main internal keel is made of 1.0mm thick galvanized steel rolled into a one-piece structure with a double-layer riveted process.
2. The main glass frame and exterior decorative surface are made of 1.2mm thick or thicker galvanized steel, stainless steel, or 304 stainless steel. The processing technology is grooved and folded. Combination of bending and rolling forming processes:
3. Product surface finishing options include electrostatic spraying, polyester paint spraying, fluorocarbon spraying, and PVC film lamination.

产品包装要求 Product Packaging Requirements

1.该系列产品为现场组装模块化产品，所有外饰面材料包装均需单支隔棉外套防磨损编织带；
2.设备带均需单片隔棉外套气泡膜包装，单件包装数量不大于4片，外包装注明易损件；

1.This series of products is modular and assembled on-site. All exterior finishing materials must be packaged with single-piece, quilted, and anti-damage braided tape.
2. Equipment straps must be packaged with single-piece, quilted, and bubble wrap. The quantity per package must not exceed four pieces. Consumable parts must be marked on the outer packaging.

产品安装技术要求 Product Installation Technical Requirements

1.框体组装结构为钢制角码直角拼接，拼接缝隙不大于0.5mm；
2.涂装表面需无明显划痕，划痕均需用专用划痕修补液；
3.墙体垂直度误差不得大于2mm；

1. The frame assembly structure is made of steel corner brackets with right angles, with a gap no greater than 0.5mm.
2. The painted surface must be free of visible scratches. Any scratches must be repaired with a dedicated scratch repair fluid.
3. The verticality error of the wall shall not exceed 2mm.

五金配件 Hardware Accessories

质 量 优 先 · 精 益 求 精 Excellence and quality first

» 铝角码
Aluminum angle bracket

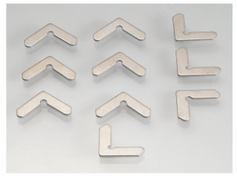

» 门扇角铁
Door leaf angle iron

» 门框连接件
Door frame connector

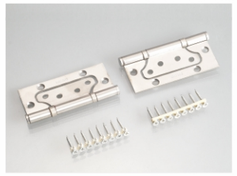

» 子母合页
Hinges with a hinged hinge

» 不锈钢合页
Stainless steel hinge

» 玻璃门合页
Glass door hinge

» 木门合页
Wooden door hinge

» 铝门合页
Aluminum door hinge

» 不锈钢合页
Stainless steel hinge

» 方型锌合金合页
Square zinc alloy hinge

» 弧形锌合金合页
Curved zinc alloy hinge

» 锌合金暗插
Zinc alloy concealed insert

» 紧固件
Fastener

» 43mm弯件
43mm curved fitting

» 静音防撞条贴
Silent anti-collision strip

» 快装单玻弯件
Quick-install single-glazed curved fitting

» 全钢门专用双弯黑色锁
Double-bend black lock for full-steel doors

» 全钢门专用双弯不锈钢锁
Double-bend stainless steel lock for all-steel doors

» 铝框大门扇专用密码锁
Combination lock for large aluminum-framed doors

» 小门扇专用密码锁
Combination lock for small doors

» 地插
Floor insert

» 气支撑组件
Gas support assembly

» 门吸
Door stopper

» 组角片
Angle bracket

» 套门组角码
Door bracket assembly

» 玻璃门黑白锁
Black and white glass door lock

» 系统门分体锁
System door split lock

» 玻璃门锁
Glass door lock

» 木门连体锁
Wooden door integrated lock

» 木门连体锁
Wooden door integrated lock

» 25mm铝合金百叶
25mm aluminum alloy louver

» 16mm铝合金百叶
16mm aluminum alloy louver

» 包墙直角件
Wall-mounted right-angle fitting

» 百叶旋钮
Louvre knob

» 天地合页
Floor hinge

» 玻璃门碰
Glass door stopper

» 窄边框单弯不锈钢锁
Narrow frame single-bend stainless steel lock

» 窄边框单弯不锈钢黑色锁
Narrow frame single-bend stainless steel black lock

» 直件
Straight fitting

» 百叶卡扣
Louvre clip

» 定位旋钮
Positioning knob